ATP INDEX

Aircraft Technical Publishers
101 South Hill Drive
Brisbane, CA 94005

Customer Service
6AM-5PM PST M-F
(800)227-4610

ATP Grid Index to Manufacturer's Publications:

Bendix/King
KX 155/165 VHF NAV/COMM TRANSCEIVERS
MAINT/INSTALL MANUALS

*** End of Index ***

MFG.

INTRO

AlliedSignal

AEROSPACE

GENERAL AVIATION AVIONICS

INSTALLATION MANUAL

BENDIX/KING®

KX 155/165

VHF NAV/COMM
TRANSCEIVERS

MANUAL NUMBER 006-00179-0006
REVISION 6 OCTOBER, 1994

RECORD OF REVISIONS

MFG REV NO	DESCRIPTION	ISSUE DATE	ATP REV DATE	INSERTED BY
4	INSTALLATION MANUAL	9/1985	3-06-86	ATP/AC
5	INSTALLATION MANUAL	2/1988	7-28-88	ATP/GM
6	INSTALLATION MANUAL	10/1994	4-13-95	ATP/JLD

RECORD OF TEMPORARY REVISIONS

TEMP REV NO	DESCRIPTION	ISSUE DATE	ATP REV DATE	INSERT BY	DATE REMOVED	REV INCOR	REMOVE BY

REVISION HISTORY AND INSTRUCTIONS

MANUAL	KX 155/165
REVISION	OCTOBER 1994
PART NUMBER	006-05179-0007

Add, delete, or replace pages as indicated below and retain all tabs and dividers. Insert this page immediately behind the title page as a record of revisions. This revision level of this manual consists of the following individual publications:

PAGE	ACTION
Title Page	Remove and Replace
Revision History	Insert Behind Title Page
Table of Contents	Remove and Replace
Section I ALL	Remove and Replace
Section II ALL	Remove and Replace
Section III ALL	Remove and Replace

SECTION I
GENERAL INFORMATION

SECTION II
GENERAL

SECTION III
OPERATION

LIST OF ILLUSTRATIONS

CHAPTER

01

SECTION I
GENERAL INFORMATION

1.1 INTRODUCTION

This manual contains information relative to the physical, mechanical, and electrical characteristics of the Bendix/King Silver Crown KX 155/165 VHF COMM Transceiver/Navigation/VOR/LOC Glideslope Receiver. Installation and operating procedures are also included.

Information relative to the maintenance, alignment, and procurement of replacement parts may be found in the KX 155/165 Maintenance/Overhaul Manual, P/N 006-05179-XXXX.

1.2 EQUIPMENT DESCRIPTION

The KX 155/165 is a VHF NAV/COMM Transceiver which provides the following functions.

A. Two-way voice communication within the frequency range of 118.00 Hz to 135.975 MHz (720 Channels) or 118.00 Hz to 136.975 MHz (760 Channels) in 25 kHz increments.

B. Reception of navigation signals within the frequency range of 108.00 MHz to 117.95 MHz in 50 kHz increments (200 channel).

C. Optional reception of glideslope signals within the frequency range of 329.15 MHz to 335.00 MHz in 150 kHz increments (40 channel).

D. VOR/LOC signal converter. (Not available on the KX 155)

The KX 155/165 is a panel mounted unit. Connections to the unit are made through one 30 and one 36 pin Molex printed circuit board edge connector and three BNC coax connectors at the rear of the unit.

Electrically, the KX 155/165 consists of the following sections:

A. COMM Transmitter
B. COMM Receiver
C. COMM Frequency Synthesizer
D. NAV Receiver

E. NAV Frequency Synthesizer
F. Glideslope Receiver and Converter (Optional)
G. Glideslope Frequency Synthesizer (Optional)
H. VOR/LOC Converter (Not available in the KX 155)
I. Gas Discharge Display
J. Microprocessor
K. Switching Power Supply
L. 4 ohm Audio Amplifier

1.3 TECHNICAL CHARACTERISTICS

	KX 155/165
TSO COMPLIANCE:	TSO RTCA DO-160 Env Cat A1D1/A/KPS/XXXXXXZBAAA
ICAO ANNEX 10 ON FM BROADCAST INTERFERENCE IMMUNNITY Post Mod 16 Only	ICAO ANNEX 10 COMM - Paragraph 4.7.3 ILS - Paragraph 3.1.4 VOR - Paragraph 3.3.8
TEMPERATURE RANGE:	-20°C to +55°C with short time operation at +70°C.
ALTITUDE:	-15,000 feet to 50,000 feet

WEIGHT:

KX 155 VERSIONS	136 MHz VERSIONS	WEIGHT
069-1024-00	069-1024-30	4.75 lbs. (2.15 kg)
069-1024-01	069-1024-31	5.30 lbs. (2.40 kg)
069-1024-02	069-1024-32	4.75 lbs. (2.15 kg)
069-1024-03	069-1024-33	5.30 lbs. (2.40 kg)
069-1024-04	069-1024-34	4.75 lbs. (2.15 kg)
069-1024-05	069-1024-35	5.30 lbs. (2.40 kg)
069-1024-06	069-1024-36	4.75 lbs. (2.15 kg)
069-1024-07	069-1024-37	5.30 lbs. (2.40 kg)
069-1024-08	069-1024-38	4.95 lbs. (2.24 kg)
069-1024-09	069-1024-39	4.95 lbs. (2.24 kg)
069-1024-10	069-1024-40	4.95 lbs. (2.24 kg)
069-1024-11	069-1024-41	4.95 lbs. (2.24 kg)
069-1024-12	069-1024-42	5.50 lbs. (2.49 kg)
069-1024-13	069-1024-43	5.50 lbs. (2.49 kg)
069-1024-20		4.75 lbs. (2.15 kg)

KX 155/165
VHF NAV/COMM TRANSCEIVER

KX 165 VERSIONS	136 MHz VERSIONS	WEIGHT
069-1025-00	069-1025-20	5.10 lbs. (2.31 kg)
069-1025-01	069-1025-21	5.65 lbs. (2.56 kg)
069-1025-02	069-1025-22	5.10 lbs. (2.56 kg)
069-1025-03	069-1025-23	5.65 lbs. (2.56 kg)
069-1025-04	069-1025-24	5.10 lbs. (2.31 kg)
069-1025-05	069-1025-25	5.65 lbs. (2.31 kg)
069-1025-06	069-1025-26	5.10 lbs. (2.31 kg)
069-1025-07	069-1025-27	5.65 lbs. (2.56 kg)

PHYSICAL DIMENSIONS:

Width:	6.25 inches (15.875 cm)
Height:	2.05 inches (5.207 cm)
Depth:	10.16 inches (25.81 cm) to end of connector

MOUNTING: Panel mounted, no shock mounting required

POWER CONSUMPTION:

KX 155: +27.5 Vdc	RECEIVE: 0.4 A max
KX 165: +27.5 Vdc	TRANSMIT: 6.0 A max
KX 155: +13.75 Vdc	RECEIVE: 0.7 A max
KX 165: +13.75 Vdc	TRANSMIT: 8.5 A max

COMM TRANSCEIVER

TSO COMPLIANCE:

Transmit:	C37b (DO-157, Class 4)
Receive:	C38b (DO-156, Class C & D)
	C38b (DO-156, Class A) 50 kHz Selectivity

APPLICABLE DOCUMENTS: RTCA DO-156, DO-157, DO-160

ICAO ANNEX 10 ON FM BROADCAST INTERFERENCE IMMUNNITY Post Mod 16 Only	ICAO ANNEX 10 Paragraph 4.7.3 RTCA DO-186 Paragraph 2.2.10 Intermodulation Paragraph 2.2.11 Desensitization ED-23A Section 3.1.10 Intermodulation ED-23A Section 3.1.11 Desensititzation

DUTY CYCLE: 10%, 4.5 minutes receive, 0.5 minutes transmit

FREQUENCY RANGE: 118.000 MHz to 135.975 MHz or 136.975 MHz in 25 kHz increments

FREQUENCY TOLERANCE: 0.0015% to meet DO-156 Class C & D

COMM TRANSMITTER

POWER OUTPUT:	10 watts minimum
MODULATION:	85% modulation capability with 90% limiting, less than 15% distortion at 85% modulation. Audio leveling circuit used.
SIDETONE OUTPUT:	Adjustable up to 100 mW into 500 ohm headphones
MICROPHONE:	Standard carbon or dynamic mic containing transistorized pre-amp. (Must provide 100 mVrms into 100 ohm load.)
HARMONIC CONTENT:	Greater than 60 dB down from carrier
HIGH TEMPERATURE PROTECTION:	If the transmitter and modulator circuits become hot enough to potentially damage any components in the transceiver, a protection circuit will automatically reduce the transmitter power consumption and output power.

COMM RECEIVER

RECEIVER SENSITIVITY:	2 μV (hard) or less (typically 1 μV) for 6 dB S + N/N with 1,000 Hz tone modulated 30%.
RECEIVER SELECTIVITY:	
KX 155/165 25 kHz SEL:	6 dB bandwidth $\pm$ 8.1 kHz 60 dB bandwidth $\pm$ 20.0 kHz
KX 155/165 50 kHz SEL:	6 dB bandwidth $\pm$ 14.5 kHz 60 dB bandwidth $\pm$ 43 kHz
RECEIVER AUDIO OUTPUT:	100 mW into 500 ohms minimum. Audio leveling circuit attacks at less than 15% modulation.
AGC CHARACTERISTICS:	From 5 μV to 20,000 μV audio output will not vary more than 3 dB. Active from no signal to +6 dBm hard.

SQUELCH:	Automatic squelch (internally adjustable carrier to noise setting) with manual disable and carrier squelch override. Both squelch adjustments are externally accessible.
SPURIOUS RESPONSE AND CROSS MODULATION PRODUCTS:	At least 80 dB down
INTERCOM INPUT:	The mic is connected to the intercom input. The receiver is operational and mic audio appears at the audio output along with received audio. 50 mV of mic audio is required for 100 mW output.

NAV RECEIVER

TSO COMPLIANCE:	C36c (DO-131, Class D) C40a (DO-153, CAT A and B)
APPLICABLE DOCUMENTS:	RTCA DO-131, RTCA DO-153, RTCA DO-160, RTCA DO-195 and RTCA DO-196.
ICAO ANNEX 10 on FM BROADCAST INTERFERENCE IMMUNITY Post Mod 16 Only:	Paragraph 3.1.4 (ILS) Paragraph 3.3.8 (VOR) RTCA DO-195 (ILS) Paragraph 2.2.2.4 Intermodulation Paragraph 2.2.6 Desensitization RTCA DO-196 (VOR) Paragraph 2.2.2.3 Intermodulation Paragraph 2.2.8 Desensitization
FREQUENCY RANGE:	108.00 MHz to 117.95 MHz in 50 kHz increments
FREQUENCY TOLERANCE:	0.0015% to meet DO-153, CAT A and B
VOR/LOC SENSITIVITY:	1/2 flag sensitivity 2 μV (hard) or less (typically 1 μV) on all channels
RECEIVER SELECTIVITY:	6 dB bandwidth shall be not less than 16.0 kHz on each side. 60 dB bandwidth shall be not less than 31.5 kHz on each side.
SPURIOUS RESPONSES AND CROSS MODULATION PRODUCTS:	At least 80 dB down

VOR COURSE ACCURACY:	Two sigma limit 3° as specified in RTCA DO-153
VOR/AGC CHARACTERISTICS:	Less than 1° change with 10 μV to 20,000 μV standard OMNI test signals. Active from half flag to +6 dBm hard.
AUDIO OUTPUT:	With a 1 kHz tone 30% modulation at least 100 mW output into 500 ohm loads
IDENT/VOICE:	With 100 μV input, 30% modulation at 1020 Hz, the ident/voice tone ratio shall not be less than 15 dB
AUDIO RESPONSE:	Less than 6 dB variation from 350 Hz to 2500 Hz
AGC CHARACTERISTICS:	From 5 μV to 20,000 μV audio output will not vary more than 3 dB
LOC CENTERING ERROR:	Two sigma limit ± 7 μA as specified in RTCA DO-131

GLIDESLOPE RECEIVER

TSO COMPLIANCE:	C34c (DO-132, Category II, Class D)
APPLICABLE DOCUMENTS:	RTCA DO-132, DO-160
CENTERING ACCURACY:	Centering accuracy of less than ± 10 μA under all service conditions (operating performance Category II, Class D).
DEFLECTION CHARACTERISTICS:	A difference in depth of modulation of 0.091 ddm, or 2 dB, shall produce a deflection of 78 μA (typical). The deviation under opposite polarity shall be 78 ± 3 μA (typical).
FREQUENCY RANGE:	329.15 MHz to 335.00 MHz 40 channels (150 kHz spacing).
STABILITY:	0.0015%
SENSITIVITY:	20 μV or less for 60% of standard deflection

SELECTIVITY:	Less than 6 dB variation when frequency is varied ± 21 kHz. At least 60 dB down from 329.00 MHz to 335.30 MHz excluding the range from ± 129 kHz of center frequency.
SPURIOUS RESPONSE:	All responses in the range from 90 kHz to 1500 MHz at least 60 dB below center frequency response, excluding the range from 329.00 MHz to 335.30 MHz.
LOADS:	Capable of operating one to eight 1000 ohm deviation loads and nine 1000 ohm alarm flag loads. No load resistors are required.

VOR/LOC CONVERTER

TSO COMPLIANCE:	C40a (DO-153, Class I and II) C36c (DO-131, Class D)
ACCURACY:	
VOR:	Typical bearing error of less than 0.5° with precision track selector (2° max. error).
LOC:	Typical centering error of less than 3 μA (7 μA max. error).
COURSE WIDTH:	
VOR:	10° ± 1° externally adjustable
LOC:	90 μA ± 5 μA for ddm of 0.093 ddm or 4 dB
INPUT IMPEDANCE:	60 KΩ for 0.5 Vrms input (VOR mode)
LOADS:	Five 1000 ohm deviation loads, three 1000 ohm flag loads and three 200 ohm to-from loads

AUDIO AMP

4 ohm Output:	4 watts minimum (13.75 volts) 8 watts minimum (27.5 volts)
Inputs:	2-500 ohm Auxiliary Inputs

1.4 UNITS AND ACCESSORIES SUPPLIED

1.4.1 KX 155/165

The Bendix/King KX 155/165 Transceivers with mounting rack (P/N 047-04874-0001) are available in the following configurations:

Part Number	RDL FCTN	GS RCVR	VOR/ LOC	ISO AMP	14 VOLT	28 VOLT	50 KHZ SELECT	136 MHZ OPTIONS	NIGHT VISION GOGGLES
069-1024-00					X				
069-1024-01		X			X				
069-1024-02					X		X		
069-1024-03		X			X		X		
069-1024-04						X			
069-1024-05		X				X			
069-1024-06						X	X		
069-1024-07		X				X	X		
069-1024-08				X	X				
069-1024-09				X		X			
069-1024-10				X	X		X		
069-1024-11				X		X	X		
069-1024-12		X		X	X				
069-1024-13		X		X			X		
069-1024-20						X	X		X
069-1024-30					X			X	
069-1024-31		X			X			X	
069-1024-32					X		X	X	
069-1024-33		X			X		X	X	
069-1024-34						X		X	

KX 155 Available Configurations (con't)

Part Number	RDL FCTN	GS RCVR	VOR/ LOC	ISO AMP	14 VOLT	28 VOLT	50 KHZ SELECT	136 MHZ OPTIONS	NIGHT VISION GOGGLES
069-1024-35		X				X		X	
069-1024-36						X	X	X	
069-1024-37		X				X	X	X	
069-1024-38				X	X			X	
069-1024-39				X		X		X	
069-1024-40				X	X		X	X	
069-1024-41				X		X	X	X	
069-1024-42		X		X	X			X	
069-1024-43		X		X		X		X	

KX 165 Available Configurations

Part Number	RDL FCTN	GS RCVR	VOR/ LOC	ISO AMP	14 VOLT	28 VOLT	50 KHZ SELECT	136 MHZ OPTIONS	NIGHT VISION GOGGLES
069-1025-00	X		X		X				
069-1025-01	X	X	X		X				
069-1025-02	X		X		X		X		
069-1025-03	X	X	X		X		X		
069-1025-04	X		X			X			
069-1025-05	X	X	X			X			
069-1025-06	X		X			X	X		
069-1025-07	X	X	X			X	X		
069-1025-20	X		X		X			X	
069-1025-21	X	X	X		X			X	
069-1025-22	X		X		X		X	X	
069-1025-23	X	X	X		X		X	X	
069-1025-24	X		X			X		X	
069-1025-25	X	X	X			X		X	
069-1025-26	X		X			X	X	X	
069-1025-27	X	X	X			X	X	X	

1.4.2 INSTALLATION KIT

Bendix/King KX 155/165 Installation Kit (P/N 050-1778-00/01/02/03), contains the following parts:

SYMBOL	PART NUMBER	DESCRIPTION	A	UM	00	01	02	03
	050-01778-0000	INKT W/GS & W/VOR KX 0165			X			
	050-01778-0001	INKT WO/GS & W/VOR KX 0165				X		
	050-01778-0002	INKT W/GS & WO/VOR KX 0155					X	
	050-01778-0003	INKT WO/GS & WO/VOR KX 0155						X
	030-01107-0020	CONNECTOR TERM 20T		EA	.	.	.	1.00
	030-01107-0040	CONNECTOR TERM 40T		EA	.	.	1.00	.
	030-01107-0054	CONNECTOR TERM 54T		EA	.	1.00	.	.
	030-01107-0064	CONNECTOR TERM 64T		EA	1.00	.	.	.
	047-05959-0002	STRAIN RELIEF W/H	A	EA	2.00	2.00	2.00	2.00
	047-05960-0001	STRAIN RELIEF W/F	A	EA	2.00	2.00	2.00	2.00
	073-00431-0003	CONN PLT CSTG	A	EA	1.00	1.00	1.00	1.00
	089-02051-0024	NUT SPEED U 6-32		EA	4.00	4.00	4.00	4.00
	089-02353-0001	NUT CLIP 6-32		EA	6.00	6.00	6.00	6.00
	089-05878-0005	SCR PHP 4-40X5/16		EA	2.00	2.00	2.00	2.00
	089-05878-0010	SCR PHP 4-40X5/8		EA	4.00	4.00	4.00	4.00
	089-05907-0006	SCR PHP 6-32X3/8		EA	4.00	4.00	4.00	4.00
	089-06012-0008	SCR FHP 6-32X1/2		EA	6.00	6.00	6.00	6.00
	090-00019-0007	RING RTNR .438		EA	3.00	2.00	3.00	2.00
P 301	030-00101-0002	PANEL MOUNT PLUG		EA	1.00	1.00	1.00	1.00
P 401	030-01094-0059	CONN 15 POS		EA	1.00	1.00	1.00	1.00
P 801	030-00101-0002	PANEL MOUNT PLUG		EA	1.00	1.00	1.00	1.00
P 901	030-01094-0060	CONN 18 POS		EA	1.00	1.00	1.00	.
P 902	030-00101-0002	PANEL MOUNT PLUG		EA	1.00	.	1.00	.

1.5 ACCESSORIES REQUIRED BUT NOT SUPPLIED

A. Broad band 50 ohm vertically polarized Communications antenna with coaxial cable.

B. Headphones: 500 ohms nominal impedance.

C. Microphone: Low impedance carbon or dynamic with transistorized pre-amp.

D. Broad band 50 ohm horizontally polarized Navigation antenna with coaxial cable.

E. Broad band 50 ohm horizontally polarized Glideslope antenna with coaxial cable or low loss spitlter used with the navigation antenna.

F. VOR, LOC, Glideslope Indicators. Various Bendix/King options include:

1. KI 203/208 Indicator (VOR/LOC only)
2. KI 204/206/209 ILS Indicator (VOR/LOC Glideslope)
3. KNI 520 Navigation Indicator (VOR/LOC Glideslope)
4. KPI 553A Pictorial Navigation System
5. KI 525/525A (VOR/LOC Glideslope)
6. KI 229 RMI
7. KI 202 (VOR/LOC Only)
8. KPI 552 Pictorial Navigation Indicator

G. In some installations it may be desirable to allow the Glideslope Receiver to operate using the aircraft's navigation antenna. In other installations it may be desirable to operate two NAV/LOC Receivers or two GS Receivers using a common antenna. Low-loss couplers are available to allow such operation.

An overall degradation in sensitivity will be realized due to the insertion loss of the coupler. The installer must verify that acceptable sensitivity and proper system performance is realized in a system that utilizes a coupler. A minimum of 20 dB of GS receiver-to-receiver isolation is required in dual installations employing a KX 155 or KX 165 GS receiver.

Examples of some common couplers are listed below. Contact the coupler manufacturer for specifications for the couplers listed.

Coupler to allow one antenna to operate:	Dayton-Granger (305)463-3451	Dorne Margolin (516)585-4000
One Nav and one GS	GSNC 20-05	H22-1
Two Navs	DRC 20-04 Or 14830	H21-1
Two Glideslopes	DGSC 20-02 or 16009	H24-1
Two Navs and two GSs	DOC 20-06 or 16010	H69-1

1.6 LICENSE REQUIREMENTS

The Federal Communications Commission requires that the operator of the transmitter of this equipment hold a restricted radio telephone operators permit (FCC Form 753) or higher class license. A permit may be obtained by a U.S. citizen from the nearest field office of the FCC; no examination is required.

This equipment has been accepted by FCC and entered on their list of type accepted equipment as Bendix/King KX 155, or KX 165 and must be identified as Bendix/King KX 155, or KX 165.

CAUTION

THE VHF TRANSMITTER IN THIS EQUIPMENT IS GUARANTEED TO MEET FEDERAL COMMUNICATIONS COMMISSION ACCEPTANCE OVER THE OPERATING TEMPERATURE RANGE ONLY WHEN A BENDIX/KING CRYSTAL IS USED IN THE STABILIZED MASTER OSCILLATOR.

USE OF OTHER THAN A BENDIX/KING CRYSTAL IS CONSIDERED AN UNAUTHORIZED MODIFICATION, AND WILL VOID THE WARRANTY.

An Aircraft Station License is required for this equipment. Forms (FCC Form 404, New Aircraft Station License, or FCC Form 405A, Renewal of Aircraft Station License) can be obtained from your nearest FCC Field Office.

1.7 REQUIREMENTS FOR TSO'D VOR/ILS GLIDESLOPE SYSTEMS

The additional units used in conjunction with the KX 155/165 must meet the specifications listed below to comprise a completely TSO'd navigation system.

1.7.1 KX 155/165 GLIDESLOPE INDICATOR REQUIREMENTS

A. The indicator shall meet all applicable requirements of TSO C34c.

B. Centering current to be 0 $\pm$ 6.6 μA with a 95% probability under all environmental conditions listed in RTCA Paper DO-132, Minimum Performance Standards -- Airborne ILS Glideslope Receiving Equipment, Paragraph 2.1, sub-paragraph B, Centering Accuracy.

C. The course deviation pointer shall visibly deflect at least $\pm$ 5/8 inch along its scale when the input current is changed from zero to $\pm$ 150 μA.

D. Deflection linearity over the deflection range from zero to 150 μA shall be within 10% of being proportional to the input current. Additionally, as the current is increased beyond that producing full scale deflection to a value of $\pm$ 685.7 μA, the indicator deflection shall not decrease.

E. When the input current is abruptly changed from any value from zero to ± 150 μA, the pointer shall reach 67% of its ultimate deflection within 2 seconds and pointer overshoot shall not exceed 5%.

F. The input impedance shall be 1 K ohms ± 5% for both the deviation indicator and warning signal.

G. A warning signal input current of 150 μA or less shall produce a fully visible warning flag. A warning signal input current of 260 μA or greater shall produce a fully concealed warning flag.

1.7.2 KX 155 LOCALIZER CONVERTER AND INDICATOR REQUIREMENTS

A. The indicator shall meet all applicable requirements of C36c.

B. Centering current to be 0 ± 6.0 μA with a 95% probability under all environmental conditions listed in RTCA Paper DO-131, Minimum Performance Standards -- Airborne ILS Localizer Receiving Equipment, Paragraph 2.1, sub-paragraph b, Centering Accuracy.

C. The course deviation pointer shall visibly deflect at least ± 3/8 inch along its scale when the input current is changed from zero to ± 90 μA.

D. Deflection linearity over the deflection range from zero to ± 90 μA shall be within 10% of being proportional to the difference in depth of modulation of the 90 and 150 Hz signals, or the deflection shall be within 5% of standard deflection (± 90 μA) of being proportional to the difference in depth of modulation, whichever is greater.

Additionally, as the difference in depth of modulation is increased beyond that producing full scale deflection (± 150 μA) to a value of 0.4 ddm, the course deviation pointer deflection shall not decrease.

E. When the input current is abruptly changed from zero to ± 150 μA, the pointer shall reach 67% of its ultimate deflection within 2 seconds and pointer overshoot shall not exceed 5%.

F. The input impedance of the indicator for both the deviation indicator and warning signal shall be 1 KΩ ± 5%.

G. A warning signal input current of 125 μA or less shall produce a fully visible warning flag. A warning signal input current of 260 μA or greater shall produce a fully concealed warning flag.

1.7.3 KX 155 VOR CONVERTER AND INDICATOR REQUIREMENTS

A. The indicator shall meet all applicable requirements of TSO C40a.

B. The bearing error shall be less than 2.5° with a 95% probability under all environmental conditions listed in RTCA Paper DO-153, Minimum Performance Standards -- Airborne VOR Receiving Equipment, Paragraph 2.1, sub-paragraph 2.1.2, Bearing Accuracy.

NOTE: For older equipment, the Bearing Error shall be less than 2.7° with a 95% probability under all environmental conditions listed in RTCA Paper DO-114, MINIMUM PERFORMANCE STANDARDS -- AIRBORNE VOR RECEIVING EQUIPMENT, Paragraph 2.1, Sub-paragraph B, BEARING ACCURACY.

C. The course deviation pointer shall visibly deflect at least ± 1/2 inch (for DO-153) or 3/8 inch (for DO-114) along its scale when the input current is changed from zero to ± 150 μA.

D. Deflection Linearity

The deflection shall be proportional to the change in phase between the two components of the standard VOR test signal, within 20% of the deflection produced by a 10° (± 150 μA) change in phase. This requirement shall be met at all deflections produced when the phase difference is varied from plus 10° to minus 10° of that producing an "on course" indication.

The pointer deflection shall not decrease as the phase difference is increased from the producing an "on course" indication to that producing an indication which is equivalent to ± 80° from "on course".

E. Deflection Response

When the difference in phase between the two components of an "on course" standard VOR test signal is abruptly changed, the pointer shall reach 70% of its ultimate position within 3 seconds and the pointer overshoot shall not exceed 20%.

F. The input impedance of the indicator for both the bearing error and warning signal shall be 1 KΩ ± 5%.

G. A warning signal input current of 125 μA or less shall produce a fully visible warning flag. A warning signal input current of 266 μA or greater shall produce a fully concealed warning flag.

H. The input impedance of the TO/FROM indicator shall be 200 ohms ± 200 μA sensitivity.

1.7.4 KX 165 VOR INDICATOR REQUIREMENTS

A. The indicator shall meet all applicable requirements of TSO C40a.

B. The bearing error shall be less than 1.9° with a 95% probability under all environmental conditions listed in RTCA Paper DO-153, Minimum Performance Standards -- Airborne VOR Receiving Equipment, Paragraph 2.1, sub-paragraph 2.1.2, Bearing Accuracy.

NOTE: For older equipment, the Bearing Error shall be less than 2.7° with a 95% probability under all environmental conditions listed in RTCA Paper DO-114, MINIMUM PERFORMANCE STANDARDS -- AIRBORNE VOR RECEIVING EQUIPMENT, Paragraph 2.1, Sub-paragraph B, BEARING ACCURACY.

C. The course deviation pointer shall visibly deflect at least ~ 1/2 inches (for DO-153) for 3/8 inch (for DO-114) along its scale when the input current is changed from zero to ± 150 μA.

D. Deflection Linearity

The deflection shall be proportional to the change in phase between the two components of the standard VOR test signal, within 20% of the deflection produced by a 10° (± 150 μA) change in phase. This requirement shall be met at all deflections produced when the phase difference is varied from plus 10° to minus 10° of that producing an "on course" indication.

The pointer deflection shall not decrease as the phase difference is increased from the producing an "on course" indication to that producing an indication which is equivalent to ± 80° from "on course".

E. Deflection Response

When the difference in phase between the two components of an "on course" standard VOR test signal is abruptly changed, the pointer shall reach 70% of its ultimate position within 3 seconds and the pointer overshoot shall not exceed 20%.

F. The input impedance of the indicator for both the bearing error and warning signal shall be 1 KΩ ± 5%.

G. A warning signal input current of 125 μA or less shall produce a fully visible warning flag. A warning signal input current of 266 μA or greater shall produce a fully concealed warning flag.

H. The input impedance of the TO/FROM indicator shall be 200 ohms ± 200 μA sensitivity.

1.7.5 KX 165 LOCALIZER INDICATOR REQUIREMENTS

A. The indicator shall meet all applicable requirements of C36c.

B. The localizer centering current to be 0 ± 3.2 μA with a 95% probability under all environmental conditions listed in RTCA DO-131, Minimum Performance Standards -- Airborne ILS Localizer Receiving Equipment, Paragraph 2.1, sub-paragraph B, Centering Accuracy.

C. The course deviation pointer shall visibly deflect at least ± 3/8 inch along its scale when the input current is changed from zero to ± 90 μA.

D. Deflection linearity over the range from zero to ± 90 μA shall be within 10% of being proportional to the difference in depth of modulation of the 90 and 150 Hz signals, or the deflection shall be within 5% of standard deflection (± 90 μA) of being proportional to the difference in depth of modulation, whichever is greater.

Additionally, as the difference in depth of modulation is increased beyond that producing full scale deflection (± 150 μA) to a value of 0.4 ddm, the course deviation pointer deflection shall not decrease.

E. When the input current is abruptly changed from zero to ± 150 μA, the pointer shall reach 67% of its ultimate deflection within 2 seconds and pointer overshoot shall not exceed 5%.

F. The input impedance of the indicator for both the deviation indicator and warning signal shall be 1 KΩ ± 5%.

G. A warning signal input current of 125 μA or less shall produce a fully visible warning flag. A warning signal input current of 260 μA or greater shall produce a fully concealed warning flag.

1.7.6 FULLY TSO'D SYSTEMS

A. The following systems when used in conjunction with the KX 165 will meet all TSO system requirements:

1. KI 206
2. KI 525A
3. KPI 552
4. KPI 553A
5. KI 202

B. The following systems when used in conjunction with the KX 155 will meet all TSO system requirements.

1. KI 203
2. KI 204
3. KI 208
4. KI 209
5. KN 72, KI 206
6. KN 72, KI 525A
7. KN 72, KPI 552
8. KN 72, KPI 553

CHAPTER

02

SECTION II
INSTALLATION

2.1 GENERAL

This section contains suggestions and factors to consider before installing the KX 155/165. Close adherence to these suggestions will assure a more satisfactory performance from the equipment.

2.2 UNPACKING AND INSPECTING EQUIPMENT

Exercise extreme care when unpacking the unit. Make a visual inspection of the unit for evidence of damage incurred during shipment. If a claim for a damage is to be made, save the shipping container to substantiate the claim. When all equipment is removed, place in the shipping container, all packing materials for use in unit storage or reshipment.

2.3 EQUIPMENT INSTALLATION

The KX 155/165 installation will conform to standards designated by the customer, installing agency and existing conditions as to the unit location and type of installation. However, the following suggestions should be considered before installing your KX 155/165. The installing agency will supply and fabricate all external cables. The connectors required are supplied by Bendix/King. Interconnect diagrams are Figures 2-5 through 2-13.

NOTE: Use good quality stranded wire with at least 600 volt insulation that will not support a flame.

If more than one Glideslope Receiver is to be operated from a single antenna, an antenna coupler such as the DORNE and MARGOLIN INC. (Model DMB 24-1) or equivalent should be used.

2.3.1 AVIONICS COOLING REQUIREMENTS FOR PANEL MOUNTED EQUIPMENT

The greatest single contributor to increased reliability of all modern day avionics is to limit the maximum operating temperature of the individual units. While modern day individual circuit designs consume much less electrical energy, the watts per cubic inch dissipated within avionics units remains much the same due to high density packaging techniques utilized. Consequently, the importance of providing avionics stack cooling is still with us.

While each individual unit may not require forced air cooling, the combined heat load of several units operating in a typical avionics stack will significantly degrade the reliability of the avionics if provisions for stack cooling are not incorporated in the initial installation.

Recommendations on stack cooling are contained in Bendix/King Installation Bulletin #55. Failure to provide stack cooling will certainly lead to increased avionics maintenance costs and may void the Bendix/King warranty.

2.3.2 MOUNTING RACK INSTALLATION

A. The KX 155/165 is mounted rigidly in the aircraft panel. Select a position in the panel that is not too close to any high external heat source. Remember to allow adequate space for installation of cables and connectors. Avoid sharp bends and placing the cables near aircraft control cables.

B. Refer to Figure 2-3 for the KX 155/165 mounting dimensions. Mark and drill the mounting holes.

C. Secure the mounting rack to the instrument panel per Figure 2-3. The rear mounting bosses should be attached to the aircraft by means of support brackets.

2.3.3 ANTENNA INSTALLATION

A. Conventional 50 ohm horizontally polarized NAV Glideslope and vertically polarized COMM antennas are required with the KX 155/165. Vertically bent whip antennas are not recommended. Wideband COMM antennas provide efficient operation over the COMM band. Antennas should be installed per manufacturer's recommendations. Additional recommendations are as follows:

1. COMM Antenna

   a. Mount antenna on flat metal surface or install a ground plane at least 18 inches square.

   b. The antenna should be well removed from any projections and the engine(s) and propeller.

2. Navigation Antenna

   a. The location should be well removed from other antennas, projections and engine(s). It should have a clear line of sight area if possible.

   b. The antenna must be mounted symmetrically with the centerline of the aircraft.

   c. Avoid running other coaxial and wires near the NAV antenna cable.

B. The antenna connectors on the KX 155/165 are identified on the rear die casting.

NOTE: With KX 155/165 viewed from the front, the NAV antenna connector is on the right and the COMM antenna connector is on the left. This means that the NAV Frequency Selector and NAV Antenna are on the same side of the radio. The COMM Frequency Selector and COMM Antenna Connector are also on the same side of the radio. The Glideslope Antenna Connector is right above the NAV Antenna Connector.

2.3.4 CABLE HARNESS AND CONNECTOR ASSEMBLY

The KX 155/165 uses a special connector that mates directly with the printed circuit board inside the unit. Assembly of the connector is as follows:

A. Contact Terminal Assembly using Molex Crimper (Figure 2-1)

1. Strip each wire 5/32" for contact terminal (Part Number 030-01107-XXXX). (The last two digits of the contact terminal part number indicates the number of terminals required).

2. Open the Molex hand crimper HT 1921 with the engraved side toward the operator. Place the conductor tab section of a contact terminal on Anvil B with the contact portion facing away from the operator. Close the crimper slightly until the contact tabs touch the female jaw.

3. Insert the stripped conductor until the insulation is even with the side of the crimper facing the operator. Crimp the conductor tabs by squeezing the handles together until the jaws are fully closed or a sufficient crimp is obtained.

4. Move the lead to Anvil A. Place the insulating tab section on Anvil A. Crimp again until the jaws are fully closed or a sufficient crimp is obtained.

B. Contact Insertion into Molex Connector Housing

1. After the contact terminals have been installed on the wiring harness, the contact terminals can be inserted into the proper location in the connector housing (P/N 030-01094-0054). The terminal cannot be inserted upside down. Be sure to push the terminal all the way in, until a click can be felt or heard.

2. The self locking feature can be tested by gently pulling on the wire.

C. Location of Polarizing Key in Housing

1. Prior to insertion of connector into rear of unit, check polarizing key position between contacts 3 and 4.

2. Refer to Figure 2-4 to check correct position of polarizing key.

D. Extraction of Contact from Molex Connector

1. Slip the flat narrow blade of a Molex contact ejector tool, HT-1884 (P/N 005-02012-0011), under the contact on the mating side of the connector. By turning the connector upside down one can see the blade slide into the stop.

2. When the ejector is slid into place, the retaining tab of the contact is raised, allowing the contact to be removed by pulling moderately on the lead.

3. Neither the contact or position is damaged by removing a contact; however, the contact should be checked visually before reinstalling in connector to be certain that retaining tab "A" extends as shown (see Figure 2-1).

E. Coax Connector

Refer to Figure 2-2 for the details for mounting the right angle coaxial BNC connector to the coax cable. Install the connector into the mounting rack.

2.3.5 KX 155/165 INSTALLATION

CAUTION

SEE PARAGRAPH 2.3.1 FOR COOLING REQUIREMENTS.

A. Looking at the top of the unit, make sure the front lobe of the holddown device is in a vertical position.

B. Slide the unit into the mounting rack until the front lobe touches the mounting rack.

C. Insert a 3/32" Allen wrench through the hole in the front panel to engage the locking screw. Turn clockwise until the rear lobe engages the mounting rack. Continue turning until the unit is secure in the mounting rack. Do not overtighten.

D. For removal, turn the locking screw counterclockwise using a 3/32" Allen wrench until the unit disengages from the mounting rack. Pull the unit out of the mounting rack by pulling on the metal tabs located behind the front panel on each side of the unit.

2.4 POST INSTALLATION CHECK

An operation performance flight test is recommended after the installation is completed to insure satisfactory performance of the equipment in its normal environment. Check all aircraft control movements to be sure no electrical cables interfere with their operation.

To check the communications transceiver, maintain an appropriate altitude and contact a ground station facility at a range of at least fifty nautical miles. Contact a ground station close in. Pull the volume control knob out to defeat the automatic squelch feature and listen for any unusual electrical noise which would reduce the COMM receiver sensitivity by increasing the squelch threshold. If possible, verify the communications capability on both the high and low end of the VHF COMM band.

CAUTION

AS AN ADDED PRECAUTION BEFORE THE FLIGHT, CHECK THE ANTENNA. VSWR SHOULD BE CHECKED WITH AN IN-LINE TYPE WATTMETER INSERTED IN THE COAXIAL TRANSMISSION LINE BETWEEN THE TRANSCEIVER AND THE ANTENNA. ANY PROBLEM WITH THE ANTENNA INSTALLATION WILL MOST LIKELY BE SEEN AS A HIGH REFLECTED POWER. A VSWR OF 3:1 WILL RESULT IN A 25% LOSS IN POWER.

NOTE: The brightness of the display can be set for the most pleasing intensity by adjusting R438 during low light level conditions. R438 is accessible through the top of the radio when it is partially pulled out of the rack.

To check the VOR/ILS system, select a VOR frequency within a forty nautical mile range. Listen to the VOR audio and insure that no electrical interference such as magneto noise is present. Check the tone identifier filter operation. Fly inbound or outbound on a selected VOR radial and check for proper LEFT-RIGHT and TO-FROM indications. Check the VOR accuracy.

NOTE: VOR Ground Station scalloping may be present.

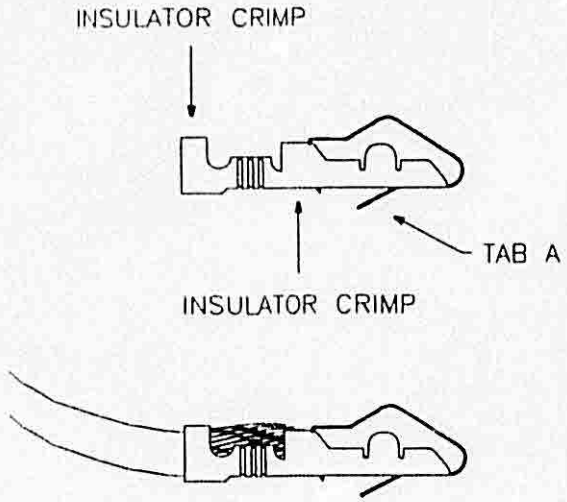

SOLDERLESS CONTACT TERMINAL
P/N 030-01107-0030

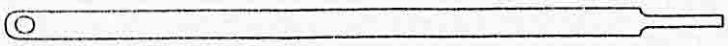

HAND EJECTOR
P/N 047-05099-0001
MOLEX P/N HT-1884

FIGURE 2-1 MOLEX TERMINAL AND TOOLS
(Sheet 1 of 3)

Holding the hand crimpers as shown, release the crimper's ratchet pawl and open by squeezing tightly on the handles, and then releasing pressure.

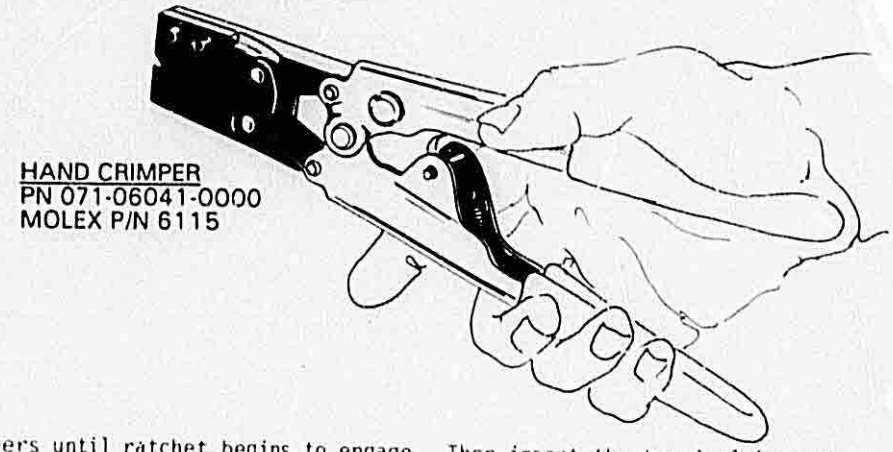

Close crimpers until ratchet begins to engage. Then insert the terminal into the jaws from the back side. (See Figures at bottom of page) For 24 to 30AWG wire, it will be necessary to start the crimp in jaw A and then complete it in jaw B.

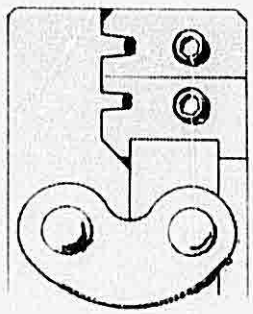

JAW	TERMINAL	WIRE SIZE	INSULATION RANGE
A	030-01107-0030	18 TO 24 AWG	.110 TO .055
B	030-01107-0030	24 TO 30 AWG	.055 TO .030

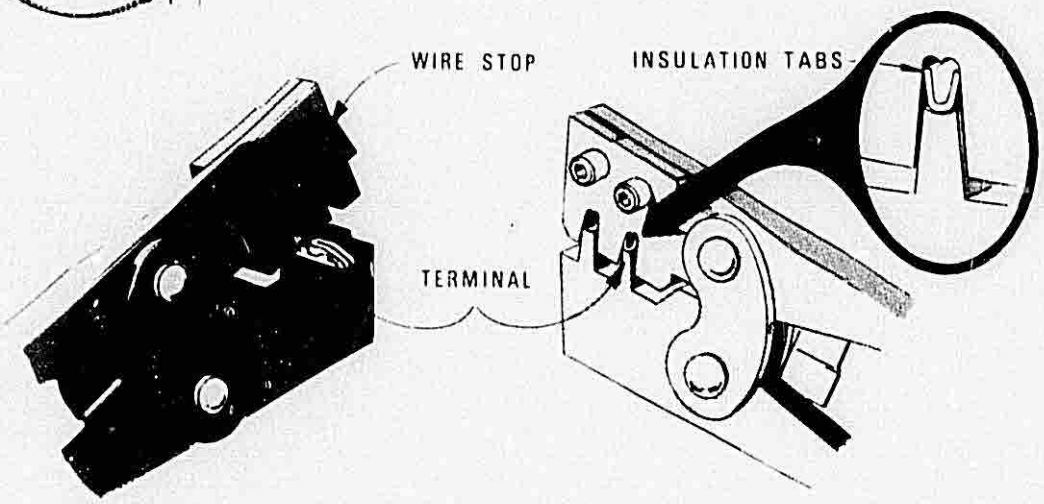

Terminal is in correct position when insulation tabs are flush with outside face of crimp jaws.

FIGURE 2-1 MOLEX TERMINAL AND TOOLS
(Sheet 2 of 3)

Once the terminal is in the correct position, close the jaws gently until the terminal is held loosely in place. Push wire stop down so that it rests snugly behind the contact portion of the terminal.

Strip the wire insulation back 1/8 inch and insert the wire through the insulation tabs into the conductor tabs until the insulation hits the conductor jaw face or until the conductor touches the wire stop.

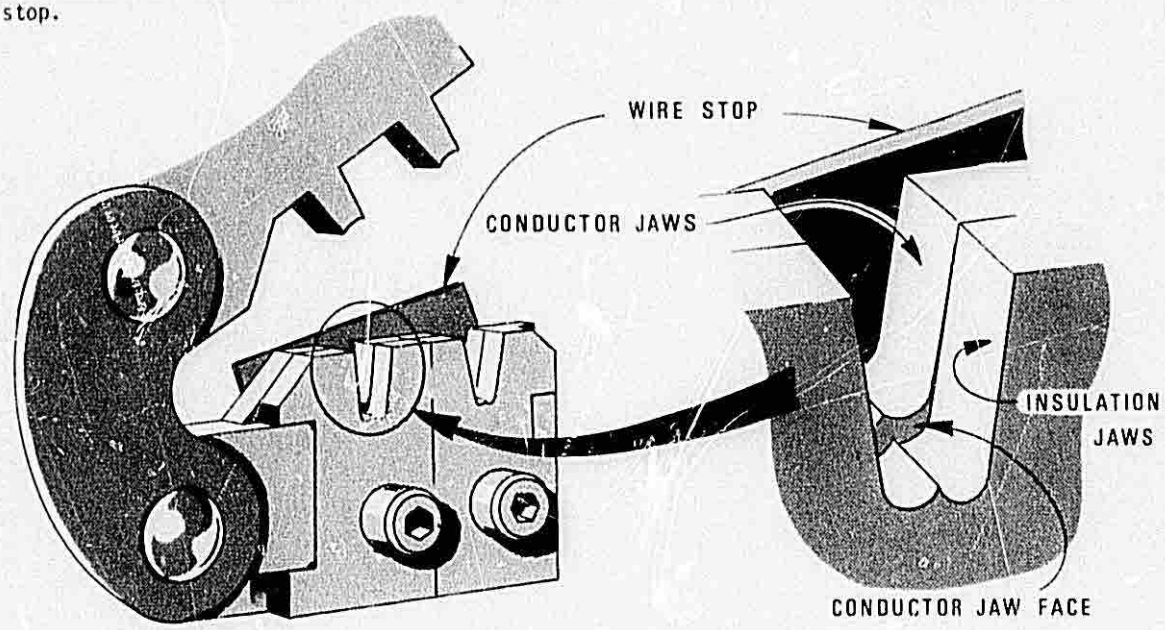

Squeeze the handles until the crimp jaws close and the ratchet releases.

Straighten the terminal if necessary, then release the plier grips and remove the crimped terminal.

CRIMPING PRESSURE ADJUSTMENT

If too much or too little pressure is needed to release the crimper's ratchet pawl at the end of the crimp stroke, the ratchet can be easily adjusted. A spanner wrench provided with the tool can be used to loosen the lock nut, and rotate the keyed stud clockwise for increased pressure and counter-clockwise for decreased pressure. Once the desired pressure has been set, the lock nut must be tightened again. Newer models may have a screwdriver adjustment.

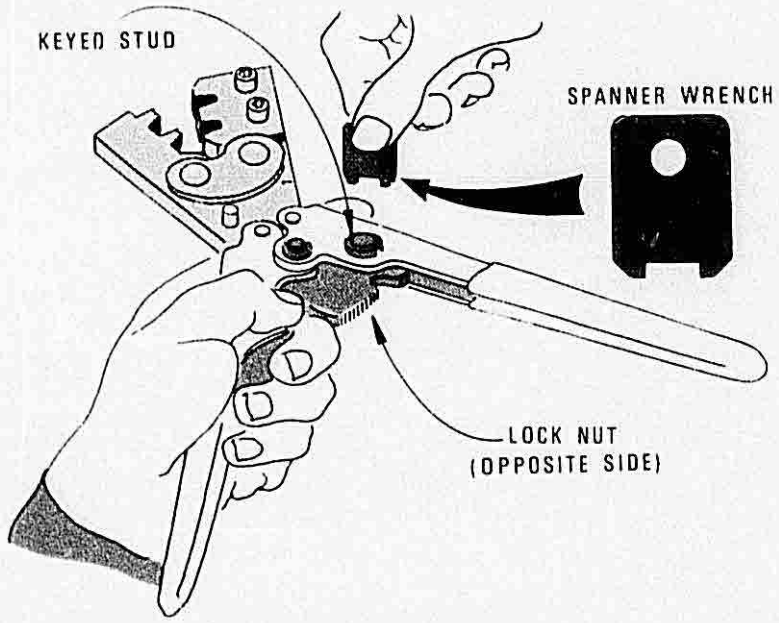

FIGURE 2-1 MOLEX TERMINAL AND TOOLS
(Sheet 3 of 3)

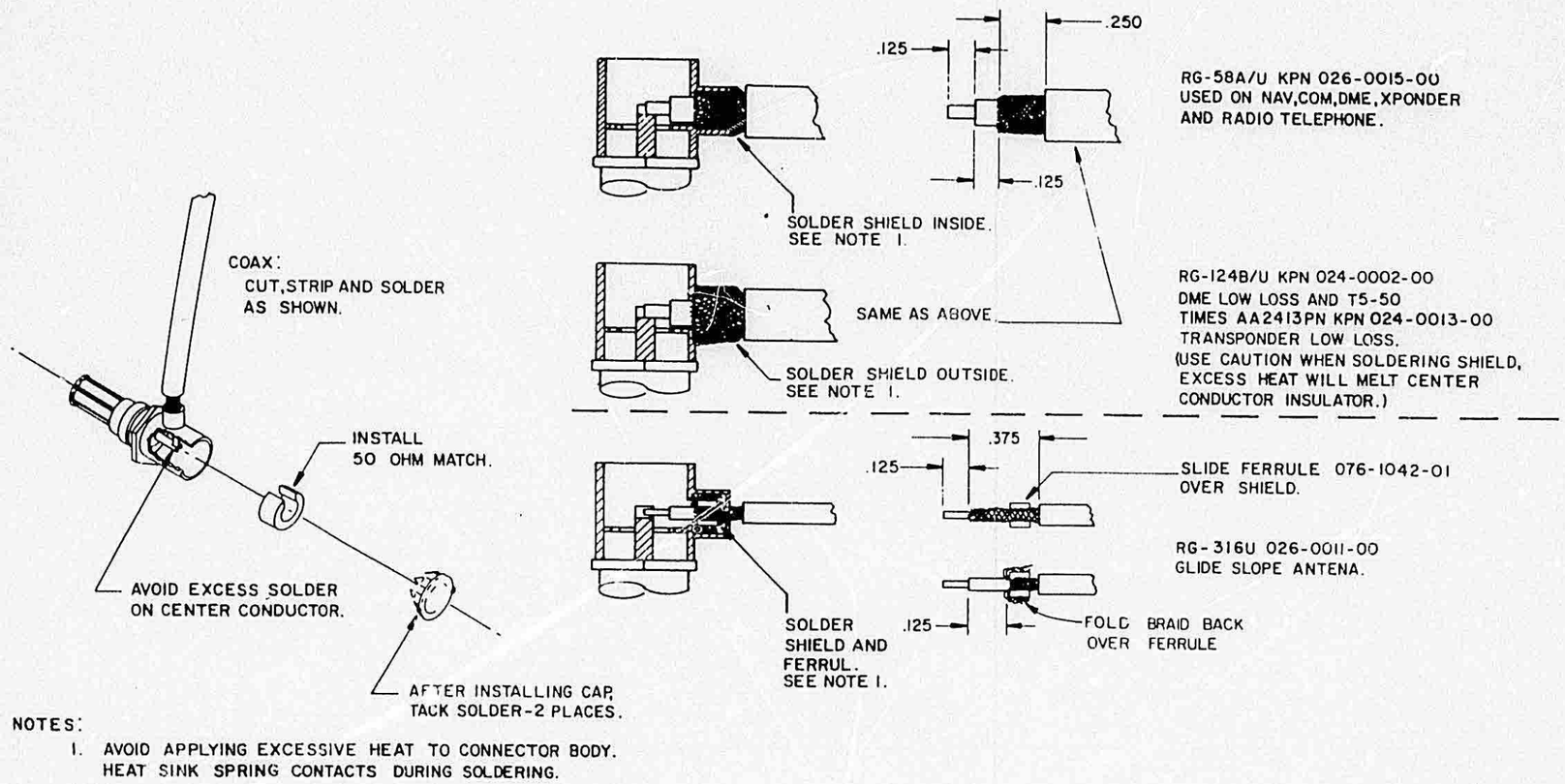

NOTES:

1. AVOID APPLYING EXCESSIVE HEAT TO CONNECTOR BODY. HEAT SINK SPRING CONTACTS DURING SOLDERING.

FIGURE 2-2 P/N 030-00101-0002 CONNECTOR ASSEMBLY

KX 155/165
VHF NAV/COMM TRANSCEIVER

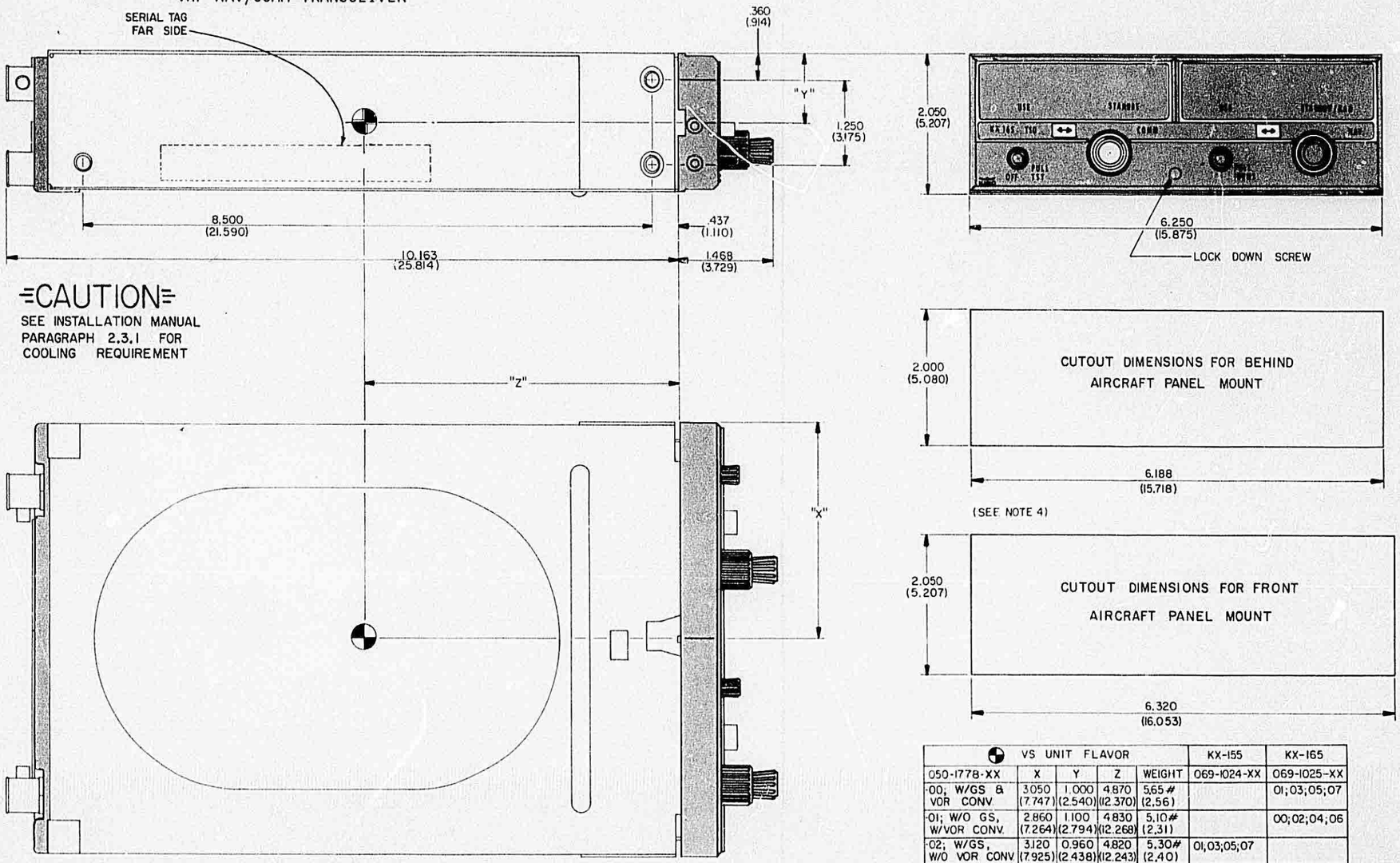

=CAUTION=
SEE INSTALLATION MANUAL
PARAGRAPH 2.3.1 FOR
COOLING REQUIREMENT

⊕ VS UNIT FLAVOR					KX-155	KX-165
050-1778-XX	X	Y	Z	WEIGHT	069-1024-XX	069-1025-XX
-00; W/GS & VOR CONV.	3.050 (7.747)	1.000 (2.540)	4.870 (12.370)	5.65# (2.56)		01;03;05;07
-01; W/O GS, W/VOR CONV.	2.860 (7.264)	1.100 (2.794)	4.830 (12.268)	5.10# (2.31)		00;02;04;06
-02; W/GS, W/O VOR CONV.	3.120 (7.925)	0.960 (2.438)	4.820 (12.243)	5.30# (2.40)	01;03;05;07	
-03; W/O GS & VOR CONV.	2.950 (7.493)	1.190 (3.023)	4.750 (12.065)	4.75# (2.15)	00;02;04;06	
-01 AUDIO	2.870 (7.290)	1.170 (2.972)	4.830 (12.243)	4.95# (2.24)	08;09;10;11	
00 GS & AUDIO	3.040 (7.722)	0.940 (2.388)	4.900 (12.446)	5.50# (2.49)	12;13;14;15	

NOTES:
1. DIMENSIONS IN ( ) ARE IN CENTIMETERS, KILOGRAMS.
2. TOLERANCES FOR PANEL CUTOUTS: +.010 (+.025) -.000 (-.000)
3. WHEN INSTALLING TWO OR MORE PANEL MOUNTED UNITS IN A STACK, THE MOUNTING TRAYS SHALL BE .050 INCHES (.127cm) APART. NEWER STYLE MOUNTING TRAYS HAVE HAD .025 INCH (.063cm) DIMPLES BUILT IN, TOP AND BOTTOM, BOTH SIDES, SO THAT TWO NEW STYLE TRAYS WILL AUTOMATICALLY BE SPACED PROPERLY.
4. TO DETERMINE STACK HEIGHT, USE THE HEIGHT DIMENSION FOR A FRONT AIRCRAFT PANEL MOUNT

FIGURE 2-3 KX 155/165 OUTLINE AND MOUNTING DRAWING
(Dwg No 155-05319-0000, Rev 1)

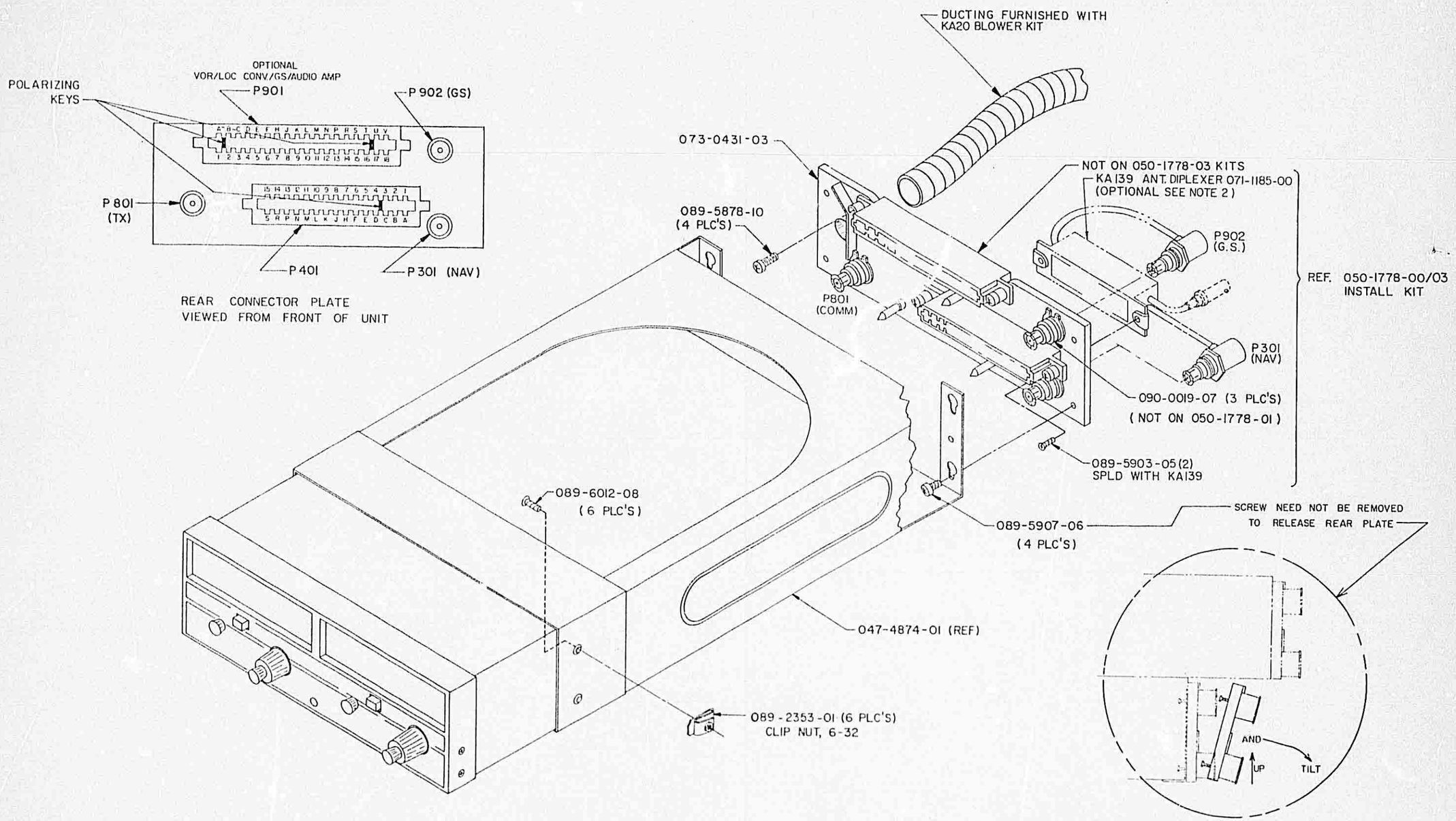

FIGURE 2-4 KX 155/165 INSTALLATION ASSEMBLY DRAWING
(Dwg No 300-02636-0000, Rev 8)
(Sheet 1 of 2)

KX 155/165
VHF NAV/COMM TRANSCEIVER

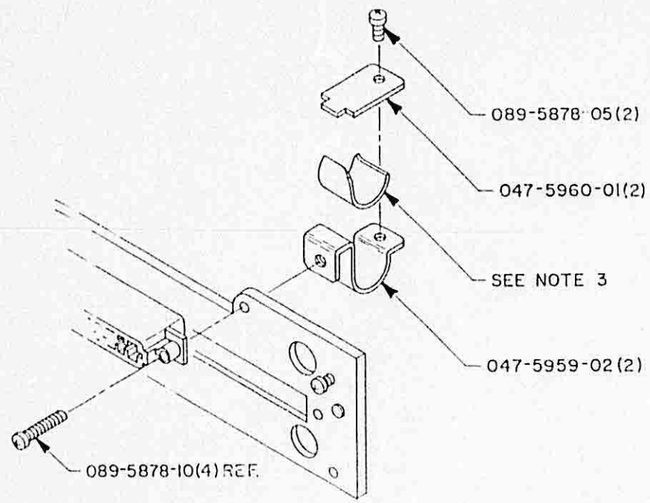

DETAIL VIEW
"STRAIN RELIEF CLIP" ASSY SHOWN HERE, MAY BE ADDED TO EITHER END OF THE TWO CARD EDGE CONNECTORS.

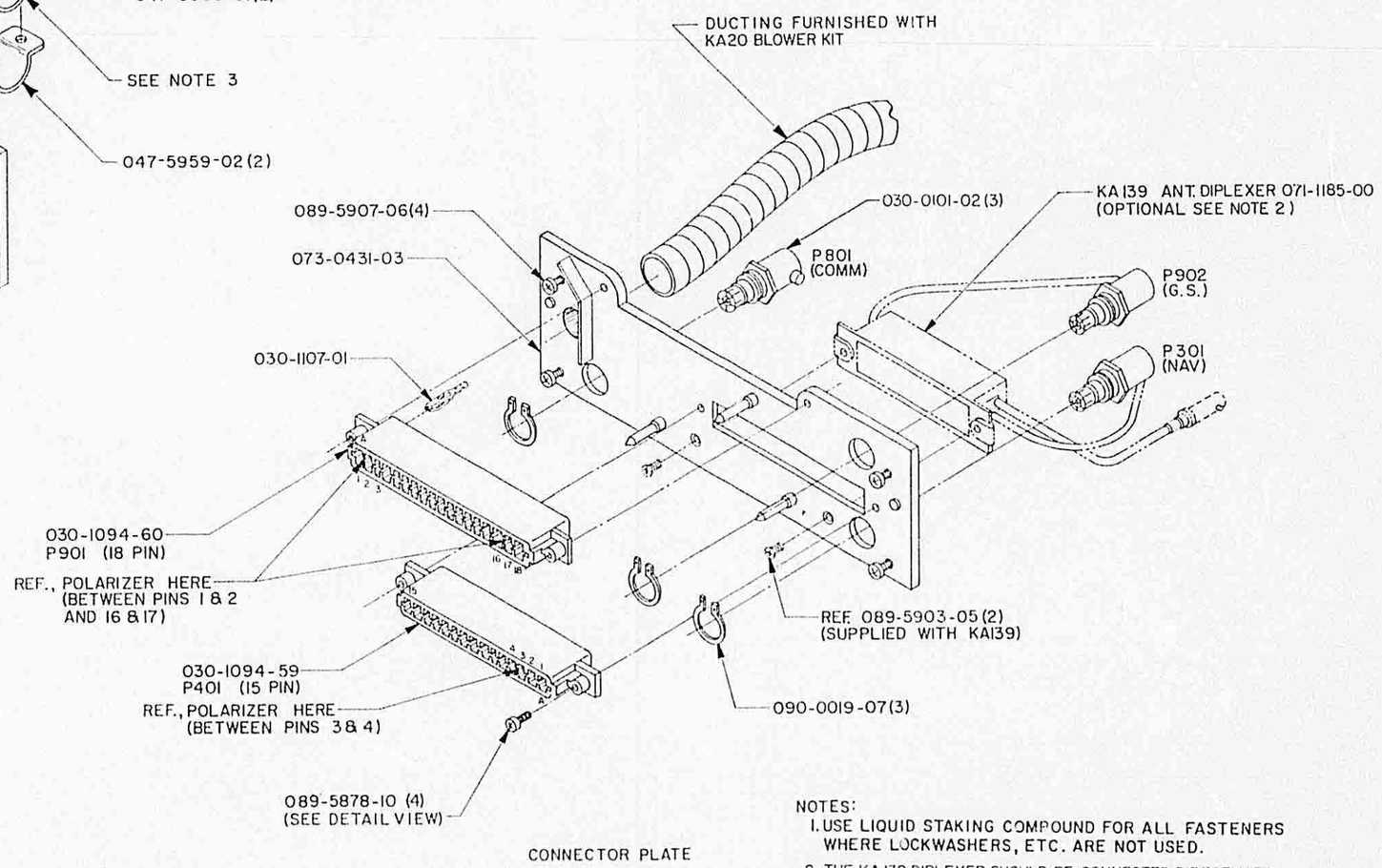

NOTES:
1. USE LIQUID STAKING COMPOUND FOR ALL FASTENERS WHERE LOCKWASHERS, ETC. ARE NOT USED.
2. THE KA 139 DIPLEXER SHOULD BE CONNECTED DIRECTLY TO THE NAV ANTENNA. DO NOT CONNECT THE KA 139 TO THE OUTPUT OF ANOTHER NAV SPLITTER. SOME NAV SPLITTERS WHICH ARE INTENDED TO DRIVE 2 VOR/LOC NAV RECEIVERS HAVE A SIGNIFICANT AMOUNT OF INSERTION LOSS WHEN USED TO DRIVE A GLIDESLOPE RECEIVER. IF A NAV ANTENNA IS USED IN COMMON WITH TWO VOR/LOC NAV RECEIVERS, THE KA 139 IS NOT RECOMMENED.
3. WRAP WIRE BUNDLE WITH ELECTRICAL FRICTION TAPE TO AVOID WIRE CHAFING.

FIGURE 2-4 KX 155/165 INSTALLATION ASSEMBLY DRAWING
(Dwg No 300-02636-0000, Rev 8)
(Sheet 2 of 2)

KX 155/165
VHF NAV/COMM TRANSCEIVER

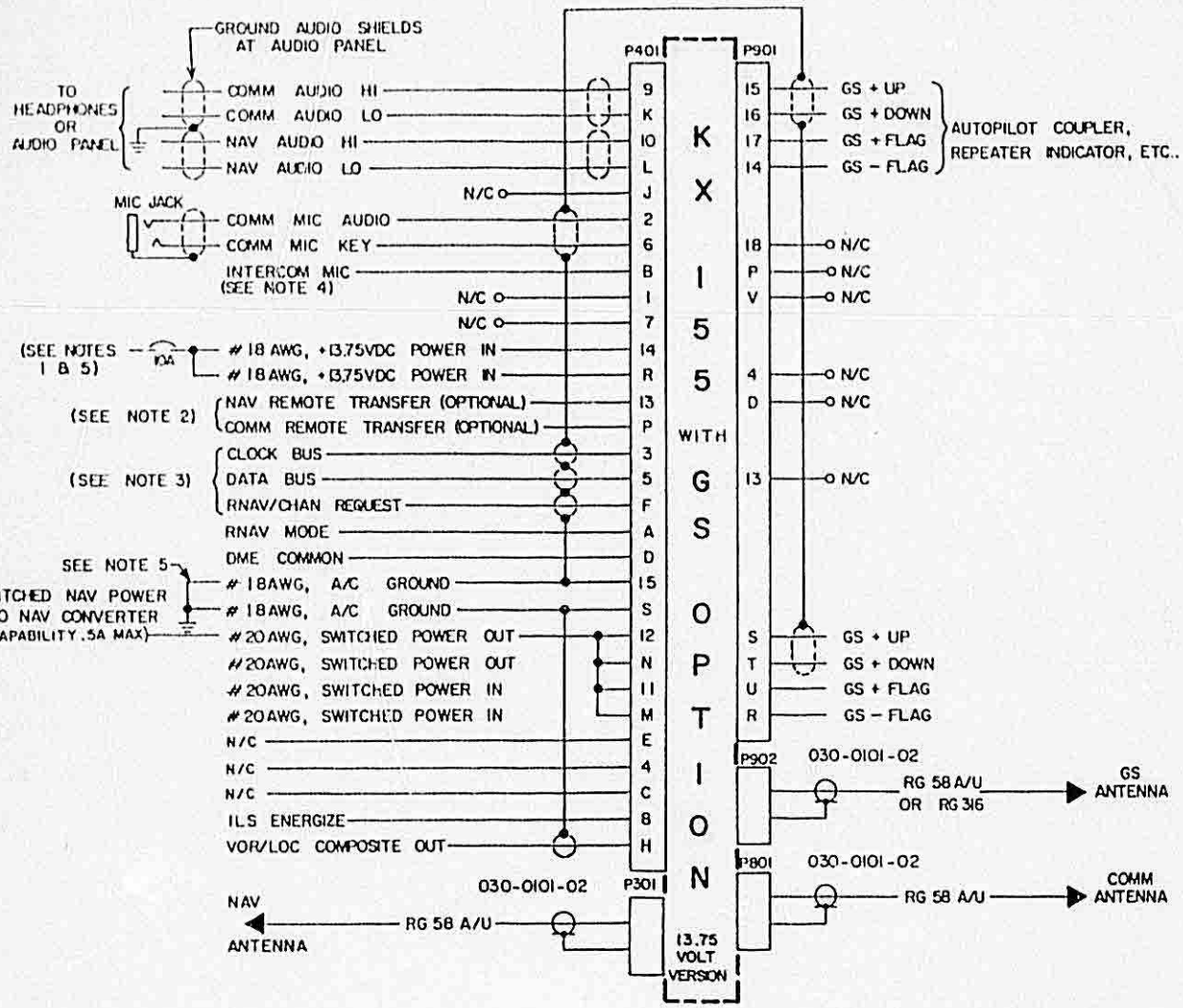

NOTES:

1. 27.5 VOLT OPERATION

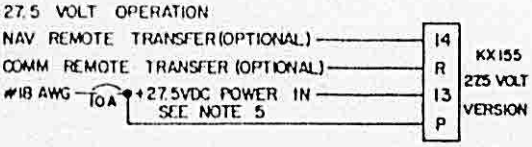

2. REMOTE TRANSFER ALLOWS TRANSFER OF "USE" AND "STBY" FREQUENCIES BY MEANS OF AN EXTERNAL SWITCH. 13.75 VOLT VERSIONS UTILIZE 27.5 VOLT POWER PINS FOR REMOTE TRANSFER INPUTS AND 27.5 VOLT VERSIONS UTILIZE THE 13.75 VOLT POWER PINS. IF REMOTE TRANSFER IS NOT DESIRED, THE INPUTS WILL NOT REQUIRE ANY CONNECTION. IF REMOTE TRANSFER IS DESIRED THE APPROPRIATE TRANSFER INPUT SHOULD BE MOMENTARILY SWITCHED FROM A/C GROUND TO A/C POWER.

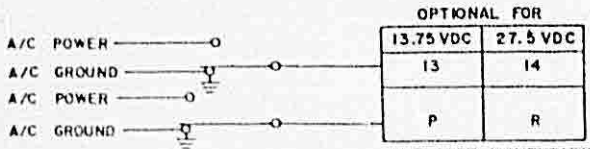

USE SPOT MOMENTARY SWITCH, NORMALLY CLOSED CONTACT IS POWER GROUND, NORMALLY OPEN CONTACT IS A/C POWER.

3. DME TUNING TO KN 62/62A/64, KDI 572/574, OR KPI 553A IS ACHIEVED SERIALLY. PARALLEL 2X5 OR SLIP CODE DME CHANNELING CAN BE ACHIEVED BY USE OF A KA 120 SERIAL TO PARALLEL CHANNEL ADAPTER. THE KA 120 MAY ALSO PROVIDE PARALLEL CHANNELING FOR OTHER KING GLIDESLOPE RECEIVERS.

4. INTERCOM WIRING OPTION:

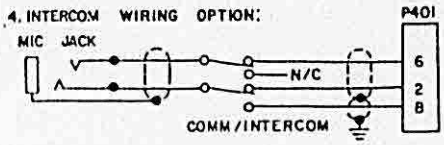

5. A/C POWER AND GND TO BE 2 - 18 AWG WIRES IN PARALLEL.

FIGURE 2-5 KX 155 NAV/COMM TRANSCEIVER
(Dwg No 155-01343-0000, Rev 3)

KX 155/165
VHF NAV/COMM TRANSCEIVER

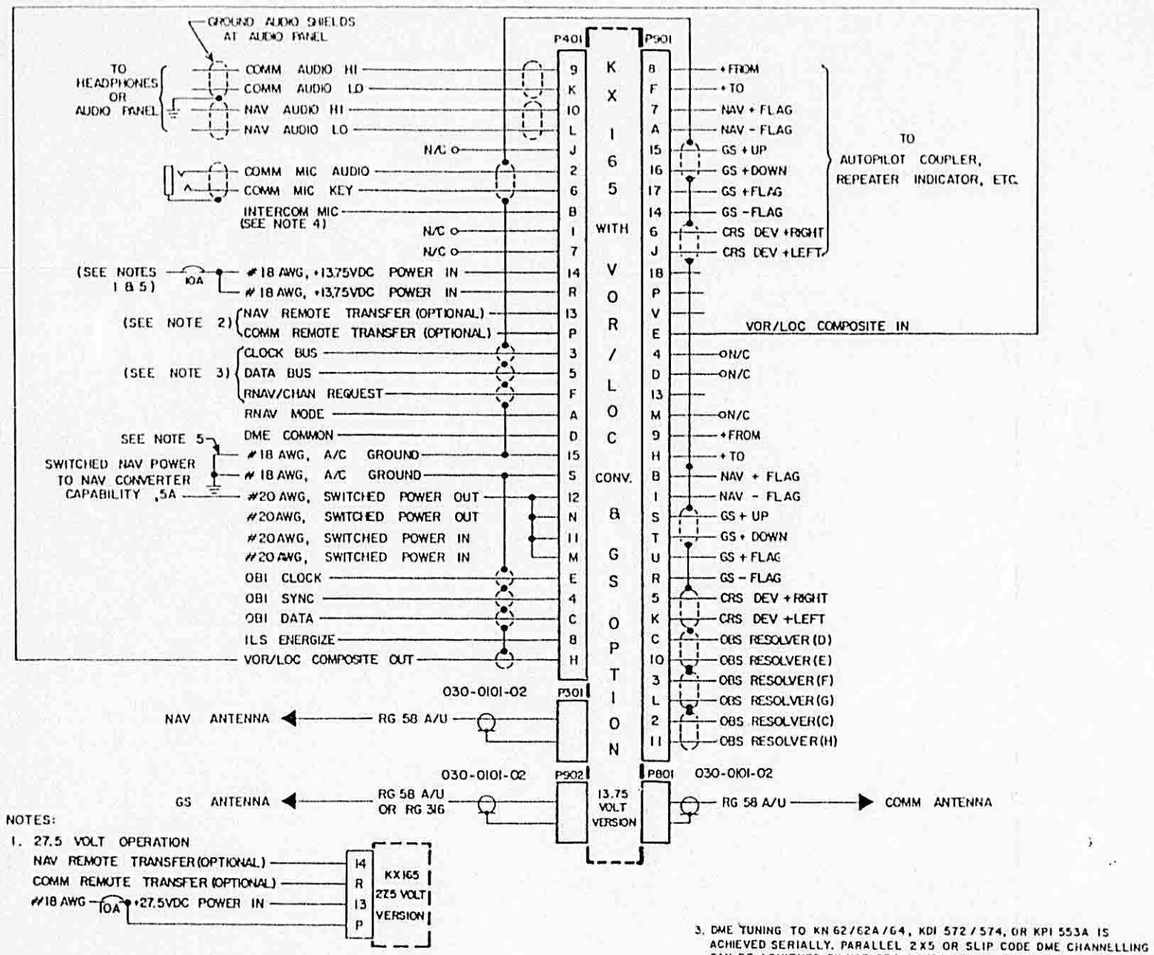

NOTES:

1. 27.5 VOLT OPERATION

2. REMOTE TRANSFER ALLOWS TRANSFER OF "USE" AND "STBY" FREQUENCIES BY MEANS OF AN EXTERNAL SWITCH. 13.75 VOLT VERSIONS UTILIZE 27.5 VOLT POWER PINS FOR REMOTE TRANSFER INPUTS AND 27.5 VOLT VERSIONS UTILIZE THE 13.75 VOLT POWER PINS. IF REMOTE TRANSFER IS NOT DESIRED, THE INPUTS WILL NOT REQUIRE ANY CONNECTION. IF REMOTE TRANSFER IS DESIRED THE APPROPRIATE TRANSFER INPUT SHOULD BE MOMENTARILY SWITCHED FROM A/C GROUND TO A/C POWER.

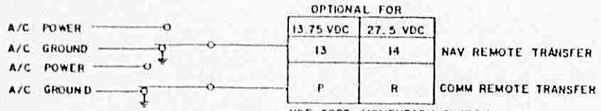

USE SPDT MOMENTARY SWITCH, NORMALLY CLOSED CONTACT IS POWER GROUND, NORMALLY OPEN CONTACT IS A/C POWER.

3. DME TUNING TO KN 62/62A/64, KDI 572/574, OR KPI 553A IS ACHIEVED SERIALLY. PARALLEL 2X5 OR SLIP CODE DME CHANNELLING CAN BE ACHIEVED BY USE OF A KA 120 SERIAL TO PARALLEL CHANNEL ADAPTER. THE KA 120 MAY ALSO PROVIDE PARALLEL CHANNELING FOR OTHER KING GLIDESLOPE RECEIVERS.

4. INTERCOM WIRING OPTION:

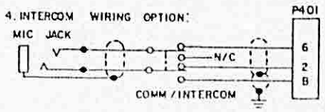

5. A/C POWER AND GND TO BE 2-18 AWG WIRES IN PARALLEL.

FIGURE 2-6 KX 165 NAV/COMM VOR/LOC CONVERTER W/GS OPTION
(Dwg No 155-01345-0000, Rev 4)

KX 155/165
VHF NAV/COMM TRANSCEIVER

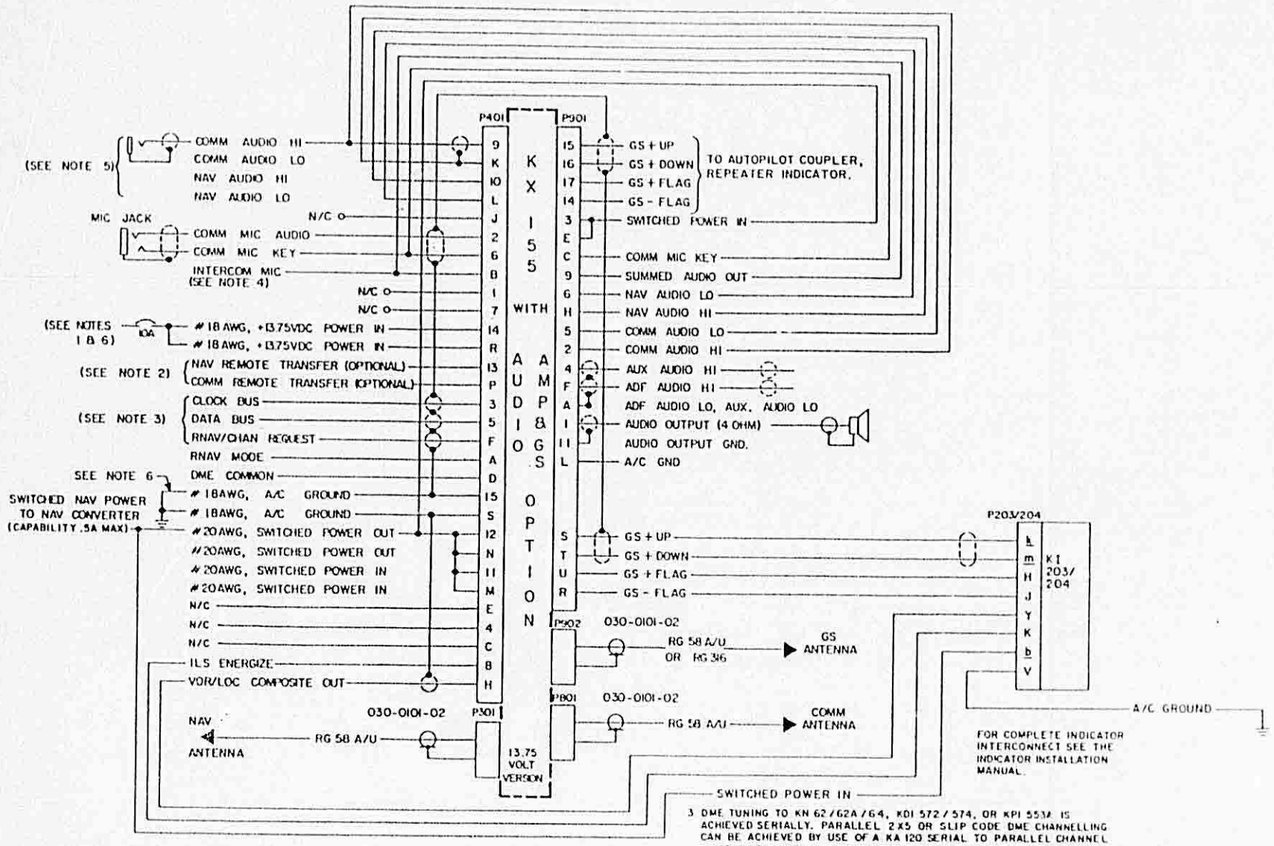

NOTES:

1. 27.5 VOLT OPERATION

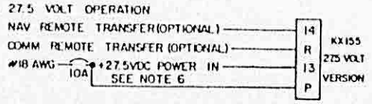

2. REMOTE TRANSFER ALLOWS TRANSFER OF "USE" AND "STBY" FREQUENCIES BY MEANS OF AN EXTERNAL SWITCH. 13.75 VOLT VERSIONS UTILIZE 27.5 VOLT POWER PINS FOR REMOTE TRANSFER INPUTS AND 27.5 VOLT VERSIONS UTILIZE THE 13.75 VOLT POWER PINS. IF REMOTE TRANSFER IS NOT DESIRED, THE INPUTS WILL NOT REQUIRE ANY CONNECTION. IF REMOTE TRANSFER IS DESIRED THE APPROPRIATE TRANSFER INPUT SHOULD BE MOMENTARILY SWITCHED FROM A/C GROUND TO A/C POWER.

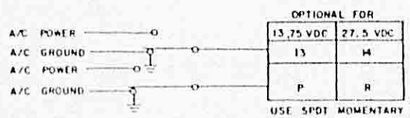

USE SPDT MOMENTARY SWITCH, NORMALLY CLOSED CONTACT IS POWER GROUND, NORMALLY OPEN CONTACT IS A/C POWER.

3. DME TUNING TO KN 62/62A/64, KDI 572/574, OR KPI 553M IS ACHIEVED SERIALLY. PARALLEL 2X5 OR SLIP CODE DME CHANNELLING CAN BE ACHIEVED BY USE OF A KA 120 SERIAL TO PARALLEL CHANNEL ADAPTER. THE KA 120 MAY ALSO PROVIDE PARALLEL CHANNELING FOR OTHER KING GLIDESLOPE RECEIVERS.

4. INTERCOM WIRING OPTION:

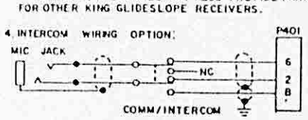

5. FOR ALL KX155'S WITH AUDIO AMP OPTION, COMM AUDIO, PIN 9 P401, IS THE SUMMED AUDIO OUTPUT TO DRIVE THE A/C HEADPHONES, COMM AUDIO, PIN 9 P401 CONTAINS COMM, NAV, ADF, AUX., AND INTERCOM AUDIO INFORMATION WHEN WIRED PER THIS DRAWING.

6. A/C POWER AND GND TO BE 2-18 AWG WIRES IN PARALLEL.

FIGURE 2-7 KX 155 NAV/COMM TRANSCEIVER WITH AUDIO AMP OPTION
(Dwg No 155-01402-0000, Rev 5)

KX 155/165
VHF NAV/COMM TRANSCEIVER

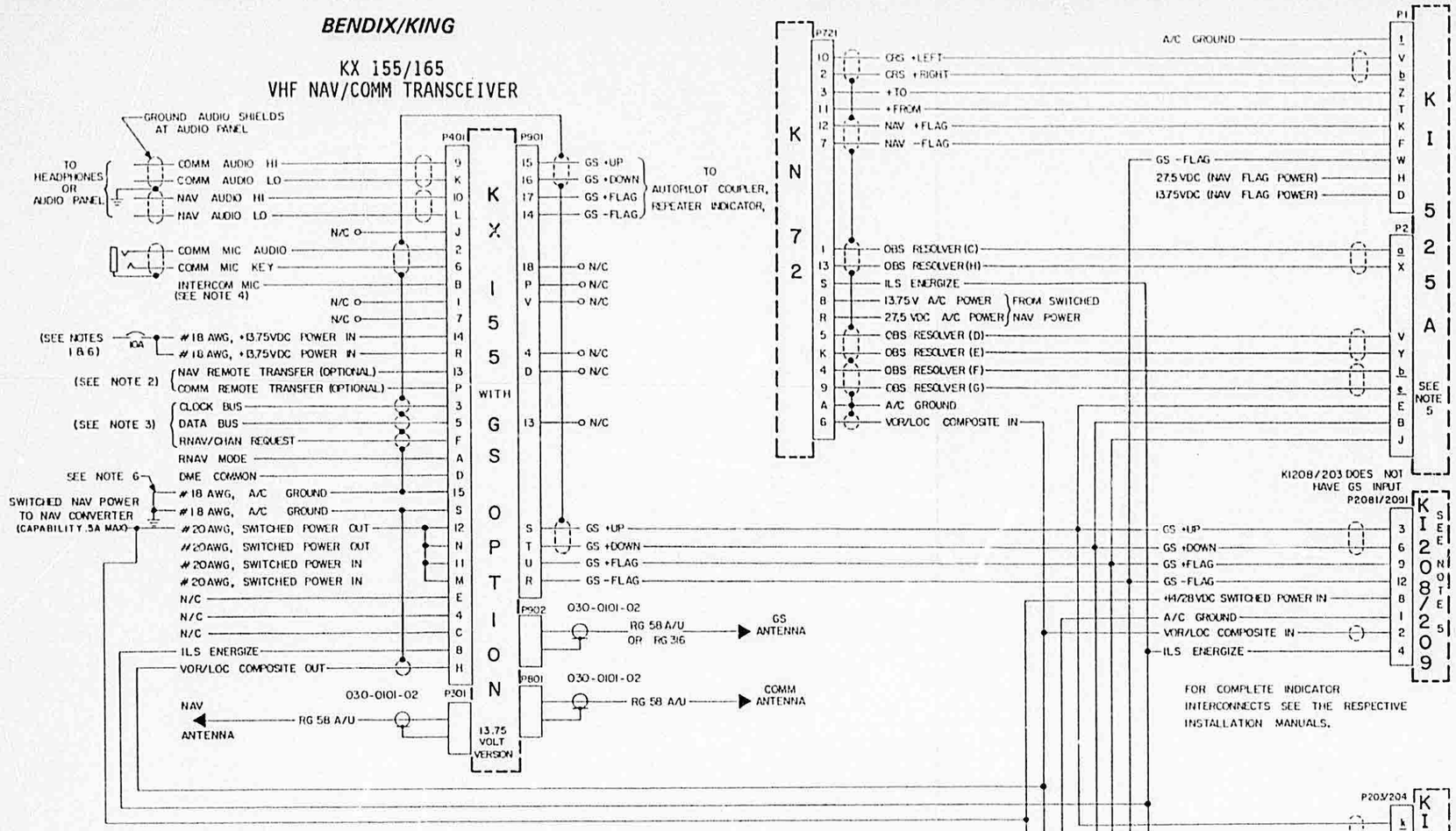

NOTES:

1. 27.5 VOLT OPERATION

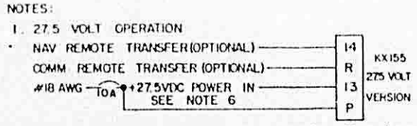

2. REMOTE TRANSFER ALLOWS TRANSFER OF "USE" AND "STBY" FREQUENCIES BY MEANS OF AN EXTERNAL SWITCH. 13.75 VOLT VERSIONS UTILIZE 27.5 VOLT POWER PINS FOR REMOTE TRANSFER INPUTS AND 27.5 VOLT VERSIONS UTILIZE THE 13.75 VOLT POWER PINS. IF REMOTE TRANSFER IS NOT DESIRED, THE INPUTS WILL NOT REQUIRE ANY CONNECTION. IF REMOTE TRANSFER IS DESIRED THE APPROPRIATE TRANSFER INPUT SHOULD BE MOMENTARILY SWITCHED FROM A/C GROUND TO A/C POWER.

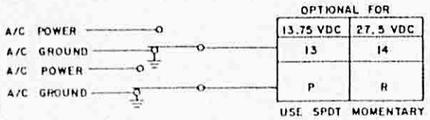

USE SPDT MOMENTARY SWITCH, NORMALLY CLOSED CONTACT IS POWER GROUND, NORMALLY OPEN CONTACT IS A/C POWER.

3. DME TUNING TO KN 62/62A/64, KDI 572/574, OR KPI 553A IS ACHIEVED SERIALLY, PARALLEL 2X5 OR SLIP CODE DME CHANNELLING CAN BE ACHIEVED BY USE OF A KA 120 SERIAL TO PARALLEL CHANNEL ADAPTER. THE KA 120 MAY ALSO PROVIDE PARALLEL CHANNELING FOR OTHER KING GLIDESLOPE RECEIVERS.

4. INTERCOM WIRING OPTION:

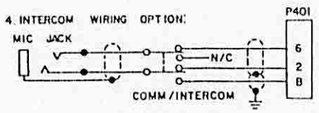

5. THE KN 72/KI525A, KI208/209, & KI203/204 ARE ALL SHOWN ON THIS INTERCONNECT AS AN OPTION. ONLY ONE VOR/LOC CONVERTER IS REQUIRED.

6. A/C POWER AND GND TO BE 2 - 18 AWG WIRES IN PARALLEL.

FIGURE 2-8 KX 155 NAV/COMM TRANSCEIVER & GS OPTION
W/KN 72, KI 208, KI 209 & KI 525A
(Dwg No 155-01344-0000, Rev 5)

KX 155/165
VHF NAV/COMM TRANSCEIVER

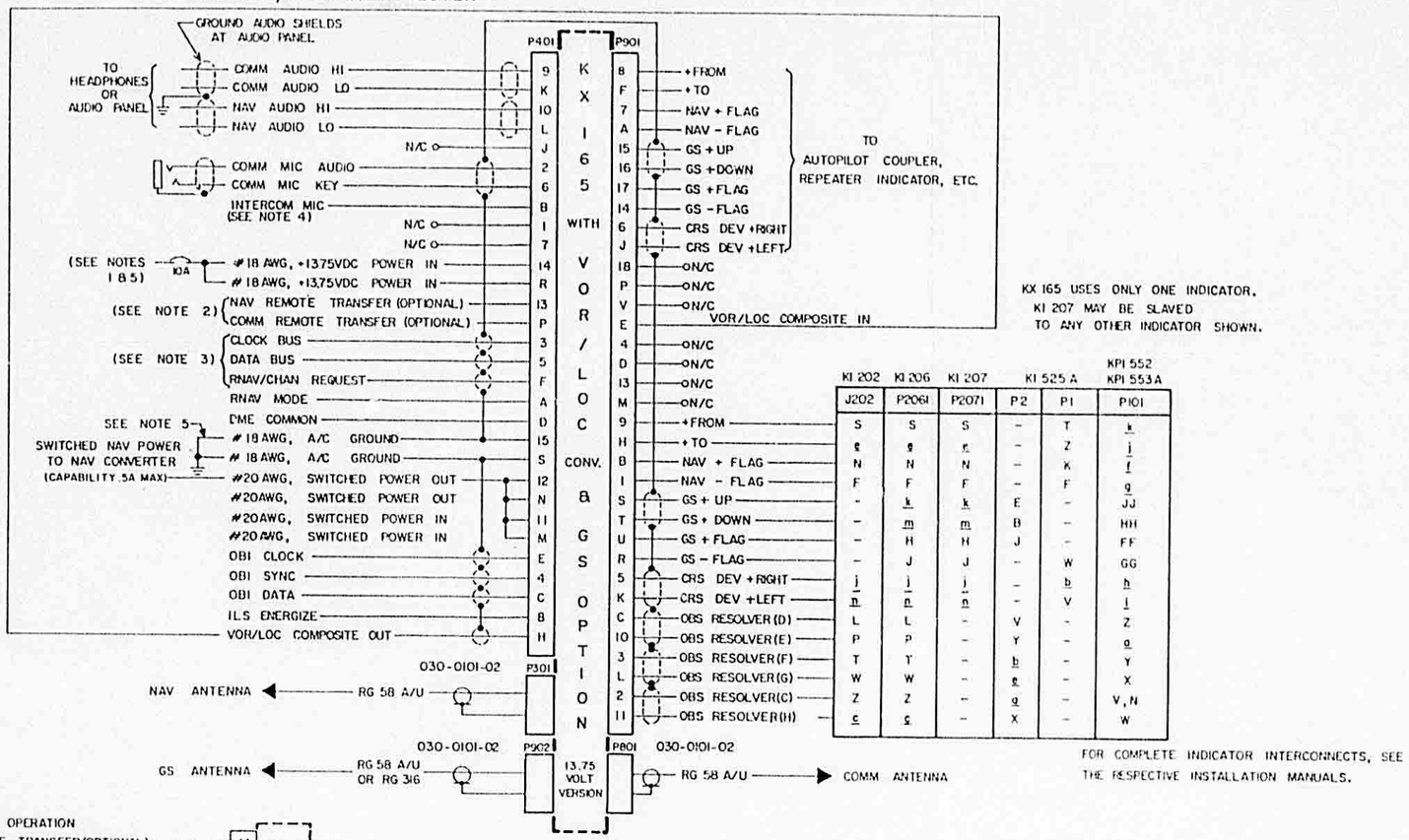

KX 165 USES ONLY ONE INDICATOR. KI 207 MAY BE SLAVED TO ANY OTHER INDICATOR SHOWN.

KI 202	KI 206	KI 207	KI 525 A		KPI 552 KPI 553 A
J202	P206I	P207I	P2	P1	P101
S	S	S	–	T	k
g	g	g	–	Z	j
N	N	N	–	K	f
F	F	F	–	F	q
–	k	k	E	–	JJ
–	m	m	B	–	HH
–	H	H	J	–	FF
–	J	J	–	W	GG
j	j	j	–	b	h
n	n	n	–	V	i
L	L	–	V	–	Z
P	P	–	Y	–	a
T	T	–	b	–	Y
W	W	–	e	–	X
Z	Z	–	a	–	V, N
c	c	–	X	–	W

FOR COMPLETE INDICATOR INTERCONNECTS, SEE THE RESPECTIVE INSTALLATION MANUALS.

NOTES:

1. 27.5 VOLT OPERATION

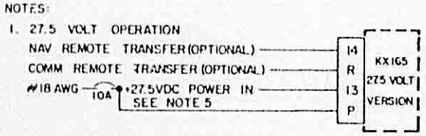

2. REMOTE TRANSFER ALLOWS TRANSFER OF "USE" AND "STBY" FREQUENCIES BY MEANS OF AN EXTERNAL SWITCH. 13.75 VOLT VERSIONS UTILIZE 27.5 VOLT POWER PINS FOR REMOTE TRANSFER INPUTS AND 27.5 VOLT VERSIONS UTILIZE THE 13.75 VOLT POWER PINS. IF REMOTE TRANSFER IS NOT DESIRED, THE INPUTS WILL NOT REQUIRE ANY CONNECTION. IF REMOTE TRANSFER IS DESIRED THE APPROPRIATE TRANSFER INPUT SHOULD BE MOMENTARILY SWITCHED FROM A/C GROUND TO A/C POWER.

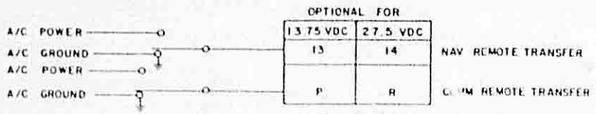

USE SPDT MOMENTARY SWITCH, NORMALLY CLOSED CONTACT IS POWER GROUND, NORMALLY OPEN CONTACT IS A/C POWER.

3. DME TUNING TO KN62/62A/64, KDI572/574, OR KPI553A IS ACHIEVED SERIALLY. PARALLEL 2X5 OR SLIP CODE DME CHANNELING CAN BE ACHIEVED BY USE OF A KA120 SERIAL TO PARALLEL CHANNEL ADAPTER. THE KA 120 MAY ALSO PROVIDE PARALLEL CHANNELLING FOR OTHER KING GLIDESLOPE RECEIVERS.

4. INTERCOM WIRING OPTION

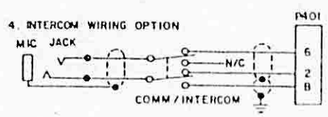

5. A/C POWER AND GND TO BE 2- 18AWG WIRES IN PARALLEL

FIGURE 2-9 KX 165 NAV/COMM VOR/LOC CONV & GS OPTION
W/KI 202, KI 206, KI 207, KI 525A, KI 552 & KPI 553A
(Dwg No 155-01346-0000, Rev 5)

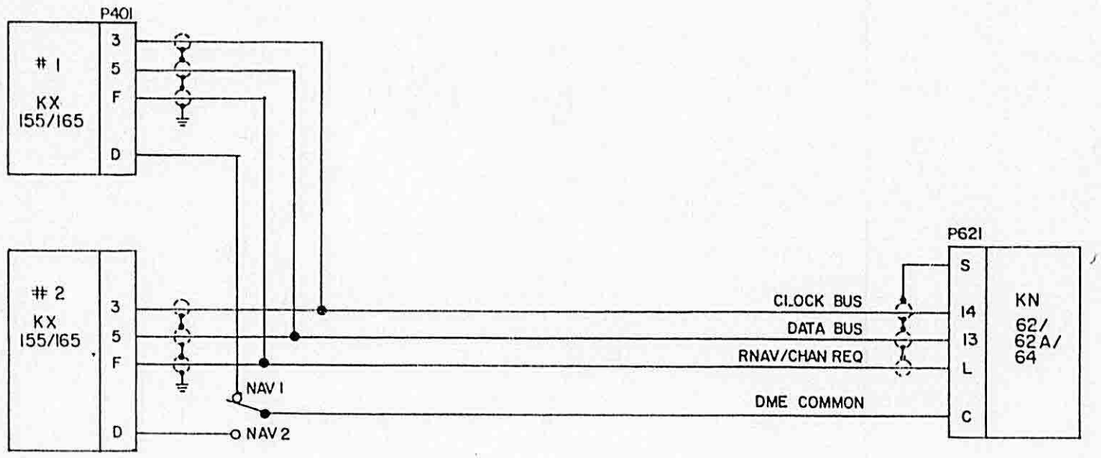

NOTE:

WHEN CHANNELING A KN62/62A/64 FROM TWO KX155/165'S, THE CLOCK BUS DATA BUS AND RNAV/CHAN REQ CAN BE PARALLELED. WITH ALL CODE SELECT LINES OPEN THE KN 62/62A CHANNELS SERIALLY. THE SWITCHING IS PERFORMED BY SWITCHING THE DME COMMON, AS DONE WITH PARALLEL CHANNELING SOURCES. ONLY THE KX155/165 WITH THE DME COMMON PULLED LOW WILL RESPOND ON THE DATA BUS TO A CHANNEL REQUEST.

FIGURE 2-10 PARTIAL INTRCNT FOR DUAL KX 155/165 CHANNELING KN 62/62A/64
(Dwg No 155-05732-0000, Rev 0)

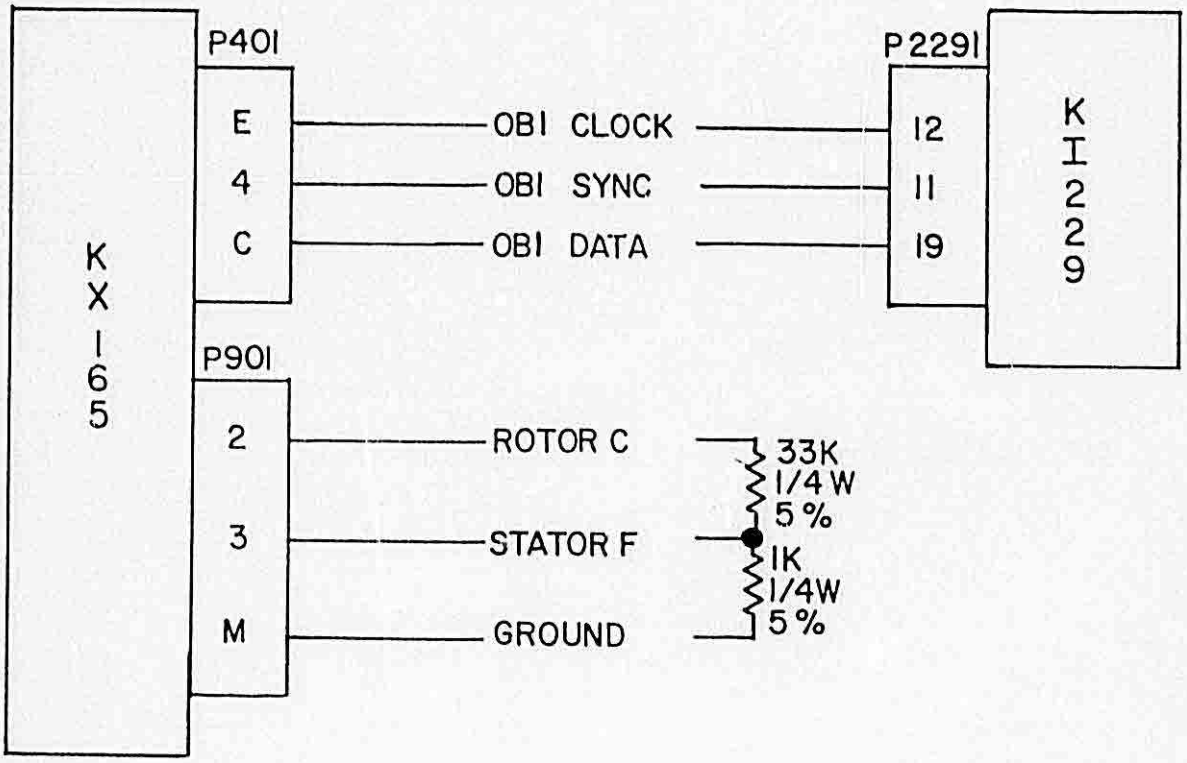

FIGURE 2-11 PARTIAL INTERCONNECT FOR KX 155/165 AND KI 229
WITHOUT OBS RESOLVER
(Dwg No 155-05733-0000, Rev 0)

KX 155/165
VHF NAV/COMM TRANSCEIVER

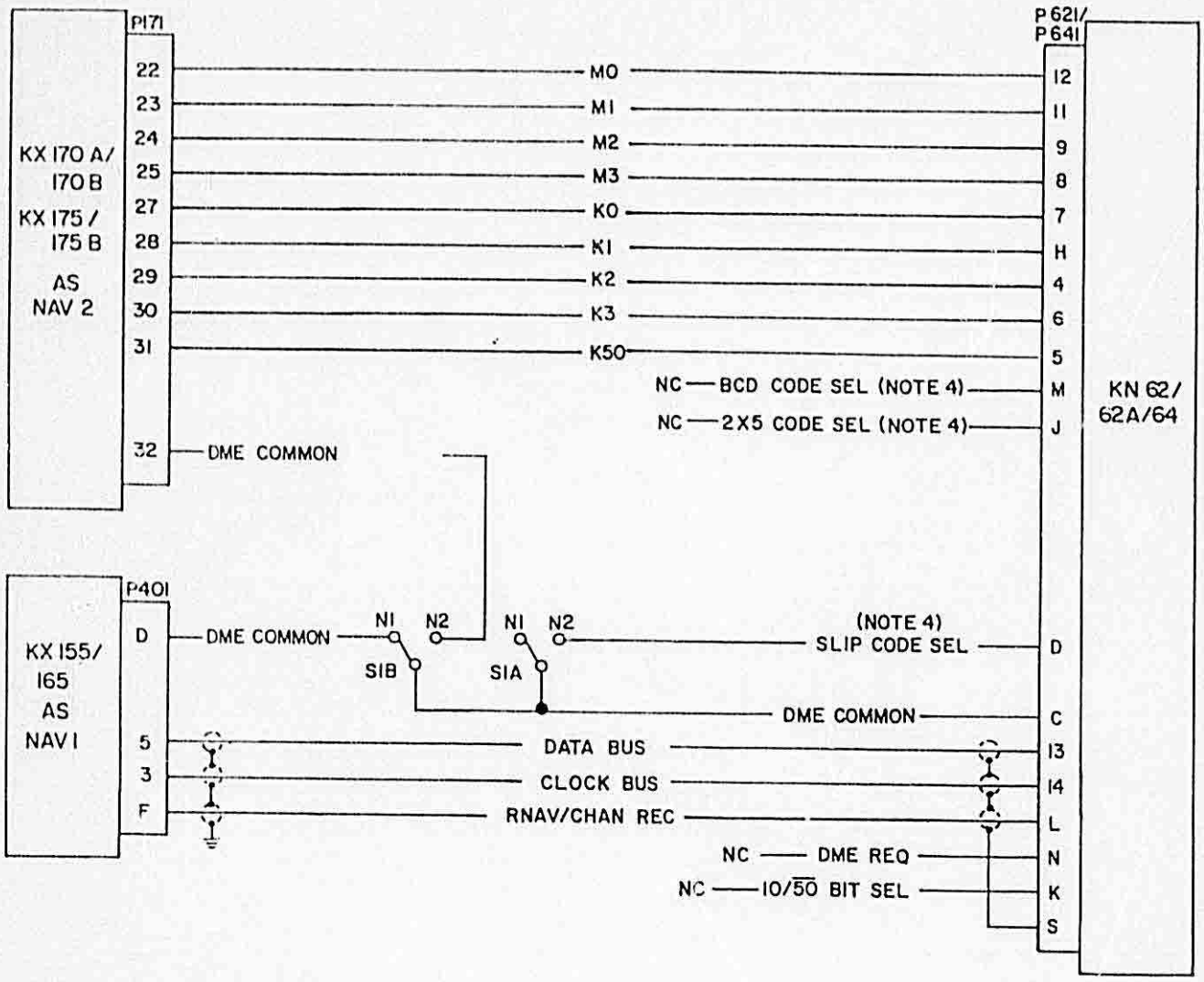

NOTES:

1. FOR COMPLETE LISTING OF ALL PIN FUNCTIONS REFER TO UNIT INSTALLATION MANUALS.
2. SI PROVIDES REMOTE NAV 1 / NAV 2 DME CHANNELING. WHEN TWO SERIAL SOURCES ARE USED THE DME COMMONS MAY BE SWITCHED BY A SPDT SWITCH. WHEN A SERIAL AND A PARALLEL SOURCE ARE USED A DPDT SWITCH IS NECESSARY SO THE CODE SELECT CAN ALSO BE SWITCHED.
3. WHEN USING A KN 62/62A/64 DME THE HOLD FUNCTION IS ACCOMPLISHED BY USE OF THE "FREQ" MODE OF THE DME.
4. CODE SELECT SHOWN IS FOR SLIP CODE CHANNELING. FOR BCD OR 2X5 CODE CHANNELING CONNECT TO THE APPROPRIATE PIN ON KN 62/62A/64 AND LEAVE THE OTHER TWO CODE SELECT LINES OPEN.

FIGURE 2-12 PARTIAL INTERCONNECT FOR KX 155/165 AND KX 170A/KX 170B/KX 170/175B CHANNELING KN 62/62A/64
(Dwg No 155-05734-0000, Rev 0)

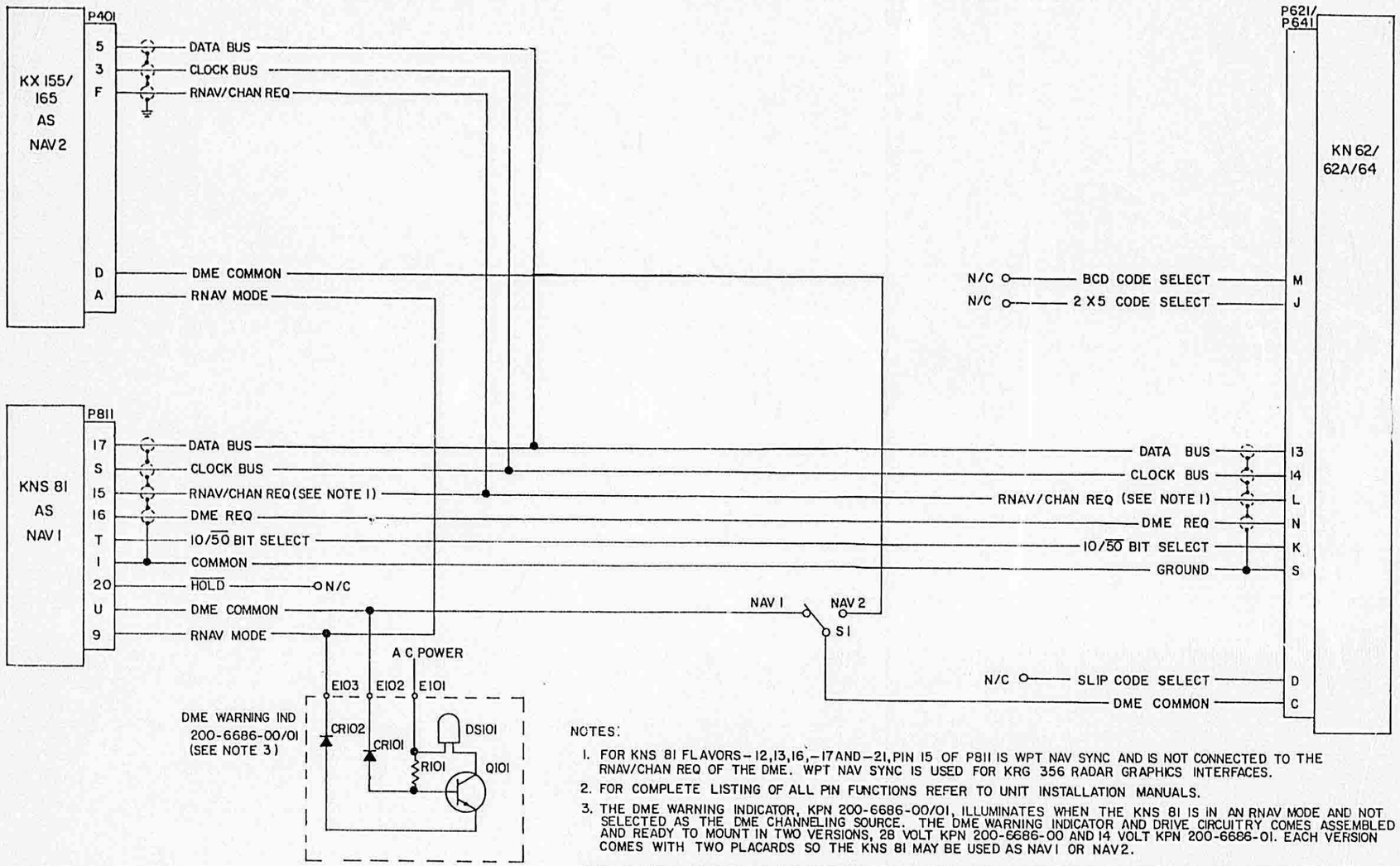

NOTES:

1. FOR KNS 81 FLAVORS-12,13,16,-17 AND-21, PIN 15 OF P811 IS WPT NAV SYNC AND IS NOT CONNECTED TO THE RNAV/CHAN REQ OF THE DME. WPT NAV SYNC IS USED FOR KRG 356 RADAR GRAPHICS INTERFACES.
2. FOR COMPLETE LISTING OF ALL PIN FUNCTIONS REFER TO UNIT INSTALLATION MANUALS.
3. THE DME WARNING INDICATOR, KPN 200-6686-00/01, ILLUMINATES WHEN THE KNS 81 IS IN AN RNAV MODE AND NOT SELECTED AS THE DME CHANNELING SOURCE. THE DME WARNING INDICATOR AND DRIVE CIRCUITRY COMES ASSEMBLED AND READY TO MOUNT IN TWO VERSIONS, 28 VOLT KPN 200-6686-00 AND 14 VOLT KPN 200-6686-01. EACH VERSION COMES WITH TWO PLACARDS SO THE KNS 81 MAY BE USED AS NAV1 OR NAV2.
4. S1 PROVIDES REMOTE NAV1/NAV2 DME CHANNELING. WHEN TWO SERIAL SOURCES ARE USED THE DME COMMONS MAY BE SWITCHED BY A SPDT SWITCH. WHEN A SERIAL AND A PARALLEL SOURCE ARE USED A DPDT SWITCH IS IS NECESSARY SO THE CODE SELECT CAN ALSO BE SWITCHED.
5. WHEN USING A KN 62/62A/64 DME THE HOLD FUNCTIONS IS ACCOMPLISHED BY USE OF THE "FREQ" MODE OF THE DME.

FIGURE 2-13 PARTIAL INTERCONNECT FOR KX 155/165
AND KNS 81 CHANNELING KN 62/62A/64
(Dwg No 155-05735-0000, Rev 0)

CHAPTER

03

SECTION III
OPERATION

3.1 GENERAL

All controls required to operate the KX 155/165 are located on the unit front panel. (See Figure 3-1)

3.1.1 COMM TRANSCEIVER

Rotate the VOL knob clockwise from the OFF position. Pull the VOL knob out and adjust for desired listening level. Push the VOL knob back in to actuate the automatic squelch.

The left portion of the digital display readout is allocated for COMM, USE, and STANDBY frequencies with a T between them to indicate the TRANSMIT mode of operation.

Select the desired operating frequency in the standby display by rotating the increment/decrement knobs either clockwise or counter-clockwise. A clockwise rotation will increment the previous frequency while a counterclockwise rotation will decrement the previous frequency.

The larger knob will change the MHz portion of the standby display. At one band-edge (118 or 135/136 MHz) the following 1 MHz change will wrap around to the other band-edge. The smaller knob will change the kHz portion of the standby display. It will change in steps of 50 kHz when the knob is pushed in, and 25 kHz when the knob is pulled out. The wrap around band-edge is also utilized when incrementing or decrementing the kHz portion of the standby display.

To tune the radio to the desired operating frequency, the desired frequency must be entered into the standby display and then the transfer button must be pushed. This will trade the contents of the active and standby display.

The transceiver is always tuned to the frequency appearing in the USE display. It is therefore possible to have two different frequencies stored in the USE and STANDBY displays and to change back and forth between them at the simple push of the transfer button.

During the transmit mode of operation, a T will appear between the USE and STANDBY displays, signifying that the transceiver is in the transmit mode of operation.

A non-volatile memory stores the comm USE and STANDBY frequencies on power down. When the unit is turned on again, the COMM USE and STANDBY windows will display the same USE and STANDBY frequencies that were displayed before power down. If an invalid frequency is detected in the memory, on power up the COMM USE and STANDBY windows will contain 120.00, thus indicating the presence of an error in the stored frequency.

3.1.2 NAV RECEIVER

The right portion of the display is allocated to NAV receiver USE and STANDBY/RAD information. The frequency channeling is the same as the COMM when operating in the frequency mode. The NAV increment/decrement knob is located on the right hand side of the front panel. The larger knob operates in 1 MHz steps and increments/decrements the STANDBY/RAD frequency display.

The smaller knob operates in 50 kHz steps. The NAV receiver's lower and upper frequency limits are 108.00 MHz and 117.95 MHz. Exceeding the upper limit of frequency band would automatically return to the lower limit and vice versa. When the smaller knob is pulled out, the VOR bearing is digitally displayed in STANDBY/RAD window.

In the bearing mode, the increment/decrement knob channels the USE frequency window and depressing the frequency transfer button will cause the USE frequency to be placed in blind storage and the STANDBY frequency (in the blind storage) to be displayed in the USE window display.

In radial mode (KX 165 only) of operation, the right hand window of NAV display shows the bearing FROM the station and when due to weak signals the warning flag is activated, a digital flag, ---, will be displayed in the radial window. Also, when an ILS frequency is selected, the digital flag --- is displayed in the radial window.

The NAV USE and STANDBY frequencies are stored in the memory on power down and return on power up. On power up, if an error is detected in the stored frequencies, the unit will display 110.00 MHz in both USE and STANDBY/RAD windows. The unit does not store the VOR bearing on power down.

When the smaller increment/decrement knob is pushed in, depressing the NAV TRANSFER button will interchange the USE and STANDBY/RAD frequencies. The NAV IDENT knob is active in the pulled out position so that both voice and ident can be heard. When this knob is pushed in, the ident tone is attenuated. The volume of voice/ident can be adjusted by turning this knob.

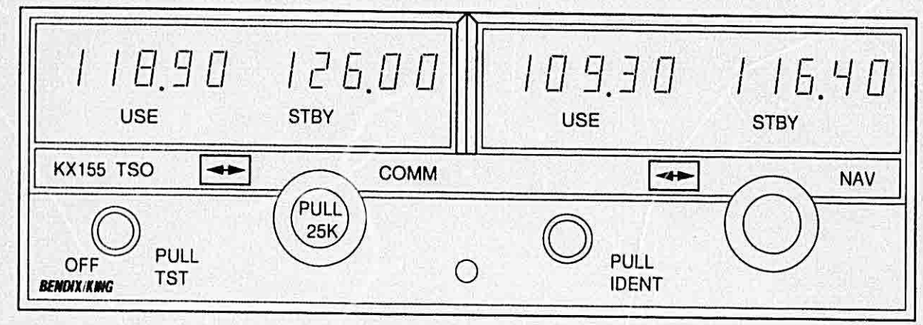

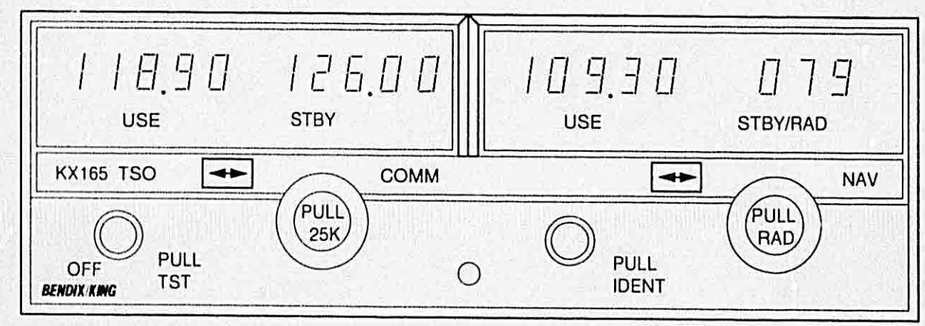

FIGURE 3-1 KX 155/165 CONTROL FUNCTION

3.2 KI 202/203/204, KI 206/208/209 INDICATOR CONTROLS AND FUNCTIONS

3.2.1 VOR OPERATION

Channel the NAV Receiver to the desired VOR and monitor the audio to positively identify the station. To intercept a selected VOR radial, turn the OBS to set the desired radial under the lubber line. The left-right needle will now deflect in the direction of the desired radial. Flying toward needle deflection will bring the aircraft to the desired radial.

To fly inbound toward the station, turn the OBS to center the left-right needle while the To-From is indicating TO. Read the bearing under the lubber line and fly that magnetic course. When the aircraft passes over the station, the To-From will momentarily disappear and then reappear as FROM. This indicates the aircraft is outbound from the station.

3.2.2 LOC OPERATION

Localizer circuitry is energized when the NAV Receiver is channeled to an ILS frequency. The VOR/LOC flag will be out of view when the signal is usable. Corrections for approach should be made toward the needle, as in VOR, but due to increased sensitivity, corrections are smaller. When flying inbound on a back course, deflection of the needle will be reversed.

3.2.3 GLIDESLOPE OPERATION

Glideslope operation is much the same as the Localizer just discussed. An Up deflection of the needle indicates the aircraft is below desired glidepath. The pilot must fly toward the needle for correction. A warning flag is provided to indicate usable signal conditions.

3.2.4 UNIT CONTROL FUNCTIONS

The following figure (Figure 3-2) displays the control functions for the KI 204/206/209. The KI 202/203/208 differs in not having a glideslope needle or flag. The KI 207 differs in not having an OBS or Azimuth card.

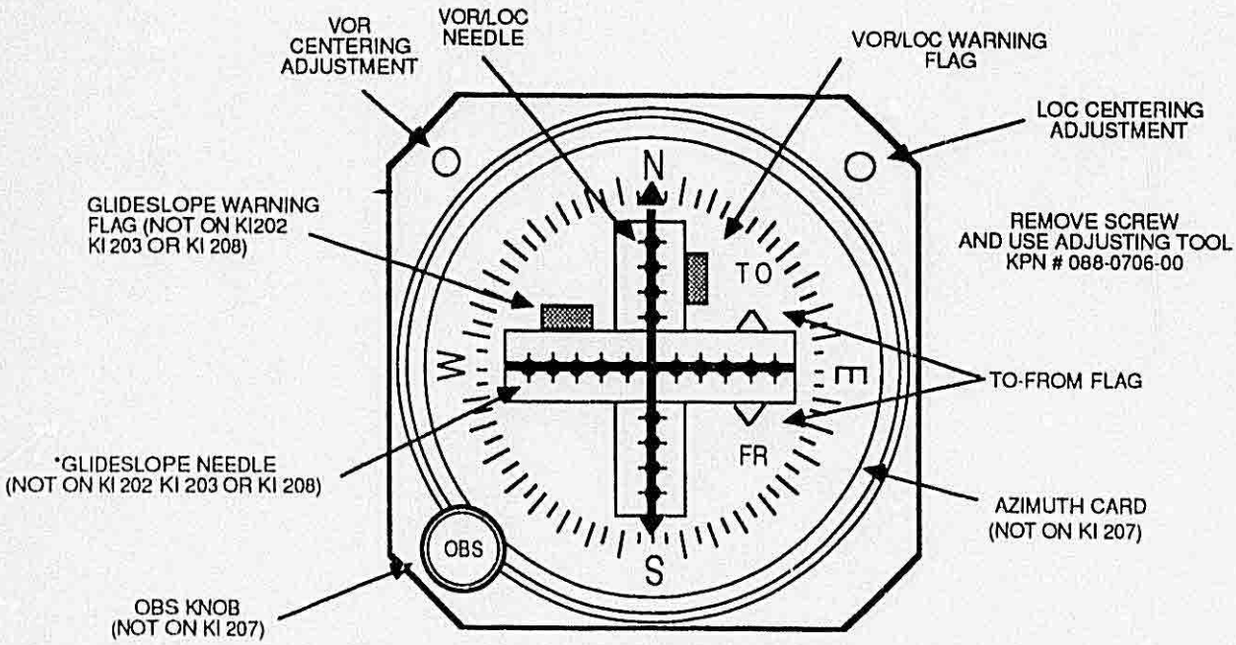

*NEEDLE OFFSET FOR CORRECT VIEWING AT NORMAL VIEWING ANGLE (15 DEGREES)

FIGURE 3-2 KI 202/203/204/206/207/208/209
TYPICAL INDICATOR MARKINGS

3.3 KI 525A INDICATOR CONTROLS AND FUNCTIONS

3.3.1 VOR/LOC AND GLIDESLOPE OPERATION

Set the navigation receiver to the desired VOR/LOC station and rotate the course select knob to adjust the selected course pointer to the desired course radial. When a usable navigation signal is received by the KI 525A the NAV warning flag will disappear from view.

For an ILS approach, tune the navigation receiver to the desired frequency. The glideslope pointer will deflect into view after a 2 to 10 second delay if a usable glideslope signal is received. The glideslope pointer indicates the relative position of the glideslope path with respect to the aircraft.

For LOC operation, tune the navigation receiver to the desired frequency and set the pointer to the selected inbound localizer course. The position of the deviation bar with respect to the symbolic aircraft indicates the relative position of the selected course. For backcourse operation, set the course pointer to the inbound localizer front course. The deviation bar position relative to the symbolic aircraft then represents the position of the backcourse with respect to the aircraft.

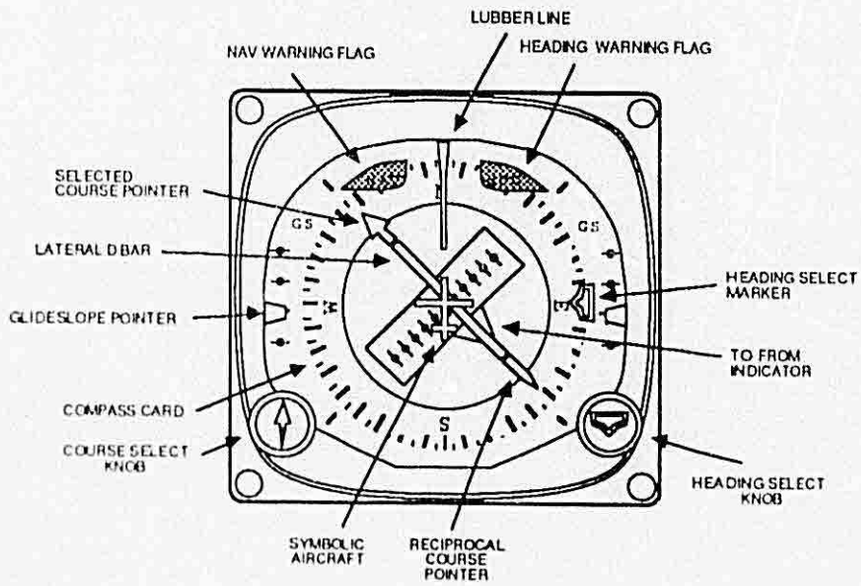

FIGURE 3-3 KI 525A INDICATOR AND CONTROLS

3.4 KNI 229 RMI OPERATION

The KNI 229 Radio Magnetic Indicator provides bearing information to both ADF and VOR stations by means of two pointers, each of which is read against the compass card. The servo drive compass card displays heading information derived from ARINC type X, Y, Z, compass headings. The double pointer is dedicated solely to a ADF DC SIN/COS source. The single pointer is assigned to VOR information.

NOTE: The single pointer can be switched between VOR and ADF by means of an external switch as explained in the installation manual of the KNI 229.

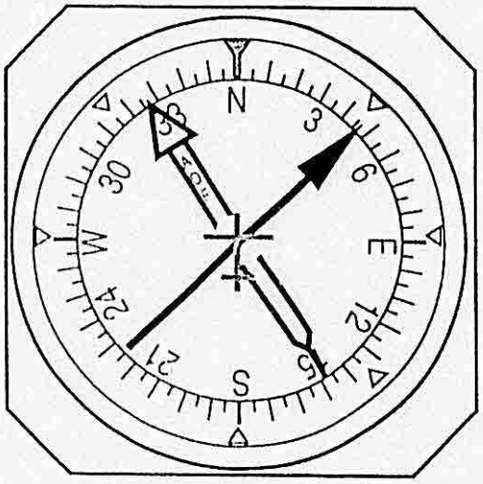

FIGURE 3-4 KNI 229 RADIO MAGNETIC INDICATOR

3.5 KPI 552 PICTORIAL NAVIGATION INDICATOR

The KPI 552 pictorial navigation indicator is a 4 inch, internally-lighted, panel-mounted instrument that presents an aircraft compass heading with respect to magnetic north, selected heading, selected course, and automatic bearing of the ADF or RMI station selected. Heading, selected heading, selected course, and the ADF or RMI station bearing are read against a servo driven compass card.

The drive electronics for these displays are contained within the indicator. Selected course and selected headings may be positioned manually with the appropriate knob on the lower front bezel. HDG selection may be also made remotely with the HDG select knob on the KMC 340 when the KPI 552 is part of the KFC 300 system.

Meter movements display glideslope deviation, course deviation, TO-FROM indication, and operate warning flags or shutters that monitor compass, navigation and glideslope valid signals.

Refer to the KPI 552/553/553A installation manual, P/N 006-00173-XXXX, for complete KPI 552 installation information.

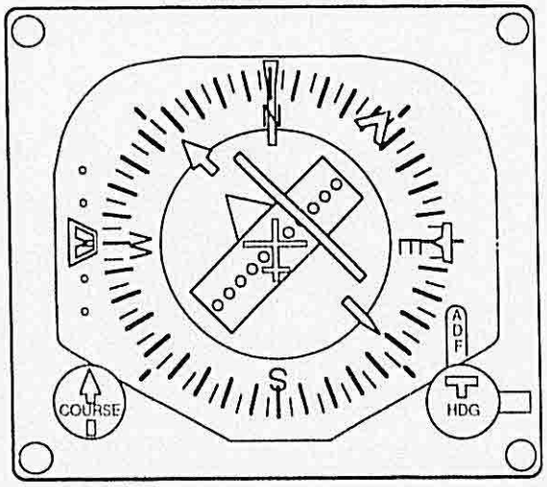

FIGURE 3-5 KPI 552 PICTORIAL NAVIGATION INDICATOR

3.6 KPI 553A PICTORIAL NAVIGATION INDI

The KPI 553A Pictorial Navigation Indicat
panel mounted instrument and is part of
Flight System. It presents a plan vie
magnetic north, selected heading, selecte
of the ADF/RMI station selected. Heading
and the ADF or RMI station bearing are
card.

The servo drive electronics for the compa
are contained within the indicator. P
positioning of selected heading. The
contained.

Meter movements display glideslope dev
indication, and operate warning flags
navigational and glideslope valid signals

In addition, the unit has a navigation
front bezel. This readout displays
annunciation.

The unit displays distance to VORTAC or w
the display, indicated by the legend NM.
tenth of a nautical mile from 0 to 99.9
nautical mile from 100 to 389 nautical mi

Ground speed is shown by the middle porti
legend KT. It is indicated to the near
ground speed is only accurate when flyi
VORTAC or waypoint.

Time-to-station is displayed by the ri
indicated by the legend MIN. It is displ
99 minutes, with 99 indicated for any tim
station is only accurate for a course
waypoint.

Radar altitude is shown as dashed lines
and 1000 feet, and numerically to the n
The appearance of the letters AL on the
of KT and MIN indicate radar altitude inf

The KPI 553A digital display also indi
information which is controlling the D
displays, a 1 (one)is displayed when the
Likewise 2 (two)is displayed when N2 is s

INDICATOR

licator is a 4-inch, internally-lighted,
of the Bendix/King KFC 300 Integrated
view of the aircraft with respect to
ected course, and the automatic bearing
ding, selected heading, selected course,
re read against a servo driven compass

ompass servo loop and ADF/RMI servo loop
Provision has been made for remote
The amplifier for this drive is self-

deviation, course deviation, TO-FROM
ags or shutters that monitor compass,
nals.

ion display located at the top of the
lays numerical data and appropriate

or waypoint on the left-hand portion of
NM. Range is indicated to the nearest
99.9 nautical miles and to the nearest
l miles.

ortion of the display, indicated by the
nearest knot from 0 to 999 knots. DME
flying a direct course to or from the

e right-hand portion of the display,
isplayed to the nearest minute from 0 to
time greater than 99 minutes. Time-to-
urse directly to or from a VORTAC or

nes on the middle display between 1250
e nearest 10 feet from 990 to 0 feet.
the right hand display and the blanking
information is being displayed.

indicates the source of the frequency
ne DME. Between the left and middle
the DME function switch is set to N1.
is selected.

Switching to HOLD will store the channeling information from the NAV frequency selector which was previously selected. No frequency selector thereafter affects the DME, and any frequency selector may then be set to another frequency. The DME will remain on the frequency being stored until N1 or N2 is again selected. 1H or 2H on the display indicates a HOLD setting, as well as the NAV frequency selector whose setting was held.

The indicator will display RNV when the displayed range, ground speed, and time-to-station are derived from an area navigation system. This legend will flash if an RNAV is on but not selected, even if another active RNAV is selected. It also flashes when HOLD mode is selected. The display is blanked when RNV is flashing.

The indicator will display all dashes if power is either turned on or momentarily lost during frequency HOLD, and normal operation may be restored by selecting N1 or N2.

Readout brightness is automatically controlled with respect to cockpit ambient lighting by a photocell located to the left of the digital readout.

Refer to the KPI 552/553/553A installation manual, P/N 006-00173-XXXX, for completed KPI 553A installation information.

3.6.1 KPI 553A (Figure 3-6)

The functions described for the KPI 552 are applicable to the KPI 553A. Additional readouts of the KPI 553A are tabulated below.

A. Distance Display	The left hand portion of the display shows distance to the VOR or waypoint, as determined by the function switch (KCU 565A or KNS 81).
B. Groundspeed or Altitude Display	The middle portion of the display shows Groundspeed (KT) or Radar Altitude (AL) as indicated by illumination of the KT legend in the middle display or by the letters AL appearing in the right hand portion of the display and the blanking of KTS and MIN. Radial information is also displayed during KNS 81 RAD mode.
C. DME Function Indicator	The middle portion of the display shows 1 or 2 to denote the NAV channel in use. A letter H denotes a HOLD state.

D. Time-to-Station Display — The right hand portion of the display shows Time-to-Station indicated by legend MIN or letters AL to indicate Altitude Display. A F character is displayed during KNS 81 RAD mode.

E. RNV Annunciator — The right hand portion of the display contains the legend RNV which indicates validity of displayed RNAV/DME data.

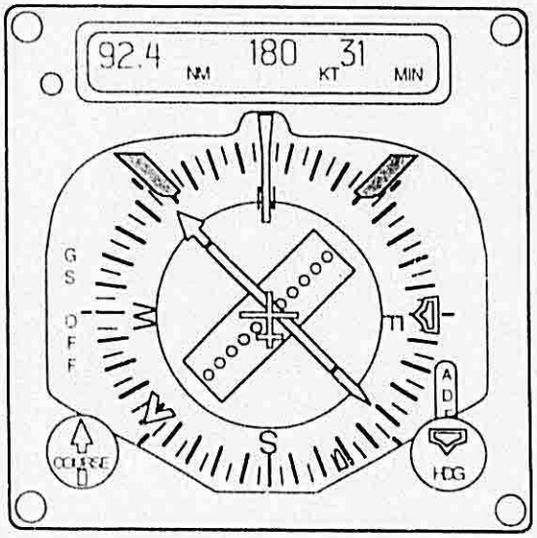

FIGURE 3-6 KPI 553A PICTORIAL NAVIGATION INDICATOR

MFG.

INTRO

AlliedSignal

ELECTRONIC AND AVIONICS SYSTEMS

MAINTENANCE MANUAL

BENDIX/KING®

KX 155/165

VHF NAV/COM TRANSCEIVERS

MANUAL NUMBER 006-05179-0009

REVISION 9, MAY, 1999

WARNING

COPYRIGHT NOTICE

RECORD OF REVISIONS

MFG REV NO	DESCRIPTION	ISSUE DATE	ATP REV DATE	INSERTED BY
0	MAINTENANCE MANUAL	3-28-81	1/1981	ATP
2&3	MAINTENANCE MANUAL	7-06-86	7/1984	ATP
6	MAINTENANCE MANUAL	12/1989	5-25-90	ATP/RMD
7	MAINTENANCE MANUAL	10/1994	4-13-95	ATP/JLD
8	MAINTENANCE MANUAL	9/00/98	5/06/99	ATP/MB
9	MAINTENANCE MANUAL	5/00/99	8/26/99	ATP/GM

RECORD OF TEMPORARY REVISIONS

TEMP REV NO	DESCRIPTION	ISSUE DATE	ATP REV DATE	INSERT BY	DATE REMOVED	REV INCOR	REMOVE BY

REVISION HISTORY AND INSTRUCTIONS

MANUAL:	KX 155/165 MAINTENANCE MANUAL
REVISION:	9, May, 1999
PART NUMBER:	006-05179-0009

Add, delete, or replace pages as indicated below and retain all tabs and dividers. Insert this page immediately behind the title page as a record of revisions. The revision level of this manual consists of the following individual publications.

KX 155/165 Maintenance Manual
Revision 9
006-05179-0009

ITEM		ACTION
KX 155/165	Maintenance Manual cover	Remove and Replace

SECTION IV

THEORY OF OPERATION

SECTION V

MAINTENANCE

SECTION VI

ILLUSTRATED PARTS LIST

LIST OF ILLUSTRATIONS

LIST OF TABLES

CHAPTER

04

SECTION IV
THEORY OF OPERATION

4.1 GENERAL

4.1.1 KX 155/165 FEATURES

The KX 155/165 is a single unit, panel mounted communication transceiver/navigation receiver with optional glideslope receiver and optional audio amplifier in KX 155's. The KX 165 contains a VOR/LOC converter with digital RMI display and optional glideslope. The functional capabilities are:

A. A microprocessor controlled communication transceiver which operates from 118.00MHz to 135.975MHz in 25KHz increments providing 720 channels.

B. A microprocessor controlled navigation receiver for VOR/LOC signals from 108.00MHz to 117.95MHz in 50KHz increments providing 200 channels.

C. A microprocessor controlled glideslope receiver operating from 329.15 to 335.00MHz in 150KHz increments for 40 glideslope channels.

D. A microprocessor controlled VOR/LOC converter capable of:

1. Calculating and displaying VOR radial digitally.

2. Providing drive signals for VOR deviation indicator(s) warning flag(s) and TO/FROM indicator(s).

3. Providing drive signals for localizer deviation indicator(s) and warning flag(s).

E. DME Channeling

1. Provides data to interface with KN 62/A/64 DME or the KDI 572/574 or KPI 553A indicator which will in turn control the KN 63 DME or the KDM 706 DME.

2. Provide data to interface with KA 120 Adapter which will in turn channel 2 x 5 or slip code DME's.

F. Digital Display of:

1. Communication "USE" and "STANDBY" frequencies.

2. Navigation "USE" and "STANDBY" frequencies.

3. VOR Radial information displayed in navigation "STANDBY" window with the KX 165 only.

G. Navigation and Communication frequency information is stored in a non-volatile memory. Information is stored when the radio is turned off and will re-channel to the same frequencies when turned on.

H. Serial OBI Data to the KI 229 and KNI 582.

4.1.2 KX 155/165 ELECTRICAL DESIGN

The KX 165/KX 155 is made up of the following sections:

A. A control section using a microprocessor to generate frequency code to channel the COMM transceiver, the NAV receiver and the glideslope receiver, to increment or decrement the selected frequency, to store the "USE" and "STANDBY" frequencies in non-volatile memory, generate the multiplexed display data for display of frequency, computed radial, and provide DME channeling information.

B. A communication transceiver with:

1. A single conversion VHF receiver with a four pole varactor tuned preselector, MOS-FET RF amplifier, MOS-FET active mixer, 8-pole monolithic crystal filter and integrated circuit IF amplifiers. Automatic noise squelch with carrier operated backup is used.

2. A broadband transmitter with flange mounted power transistors is followed by a three section elliptic function type lowpass filter.

C. A navigation receiver with a four pole, varactor tuned preselector, MOS-FET amplifier, MOS-FET active mixer, 8-pole monolithic crystal filter and integrated circuit IF amplifiers.

D. A VOR/LOC converter which processes the NAV composite signal from the NAV receiver and outputs a signal suitable for driving deviation indicators, warning flag indicators, and "TO-FROM" indicators. Digital radial information is supplied to the microprocessor for computation and display.

E. A power supply consisting of a high efficiency switching regulator with over voltage protection and current limiting.

F. A glideslope receiver with converter using an audio frequency IF of 33.3KHz and microprocessor control of frequency selection. The processed output signal will drive deviation indicators and warning flags.

4.2 BLOCK DIAGRAM DETAILED CIRCUIT THEORY

4.2.1 MICROPROCESSOR

The microprocessor (Figure 4-1) is the heart of the radio and contains 2K BYTES of permanent Read Only Memory (ROM) for program instruction and 100 BYTES of non-volatile memory externally for frequency information storage. The microprocessor receives 3.2MHz and 12.5KHz clock signals from the NAV LSI which have been derived from the 12.8MHz master oscillator. The 12.8MHz master oscillator also feeds signals to the COMM LSI and the glideslope LSI.

The microprocessor sends a three bit code to each of the LSI devices to determine the reference phase divide ratio. A 16 bit binary code is also sent to determine the divide ratio of the variable channel. The variable channel is the VCO signal divided by a number determined by the 16 bit binary code. The variable signal is phase-compared to the reference frequency in the LSI and "up" and "down" error pulses are fed to the current sourced charge-pumps to provide a DC error signal for correcting the VCO frequency. A 2 to 4 bit BCD decoder is used to monitor the NAV transfer, bearing, COMM transfer and 25/50KHz switch functions.

The increment/decrement channel select switches send three pulses to the microprocessor (left, pulse, right) in a specific sequence to provide the code and validity check for increment and decrement operations. The COMM transmit mode is active when the PTT line goes low and the inverted PTT is applied to the microprocessor. The letter "T" appears in the COMM window, the COMM synthesizer is rechanneled and the transmitter is activated when in the COMM transmit mode.

Four strobe lines are decoded with a 2 to 4 decoder. The strobe lines enable the three LSI frequency synthesizer and an OBI strobe output is provided. The microprocessor provides serial DME data, DME enable and DME clock when a signal is received at the DME request. The DME data interfaces with the KN 62/62A/64, KDI 572/574, KPI 553A AND KA 120. COMM and NAV frequency displays are generated by the microprocessor by providing control signals and two BCD words simultaneously. The COMM decoder/cathode driver decodes the BCD data to the seven segment display and the mux clock and mux sync signals from the microprocessor drive the multiplex counter. The output of the multiplex counter controls the anodes of the displayed digits through the anode drivers. A 48:1 dimming ratio of the display is controlled by a photocell which varies the pulse width of the pulses applied to the cathode drivers for current programming. The microprocessor reset logic block controls the reset sequence for turn-on or power transients.

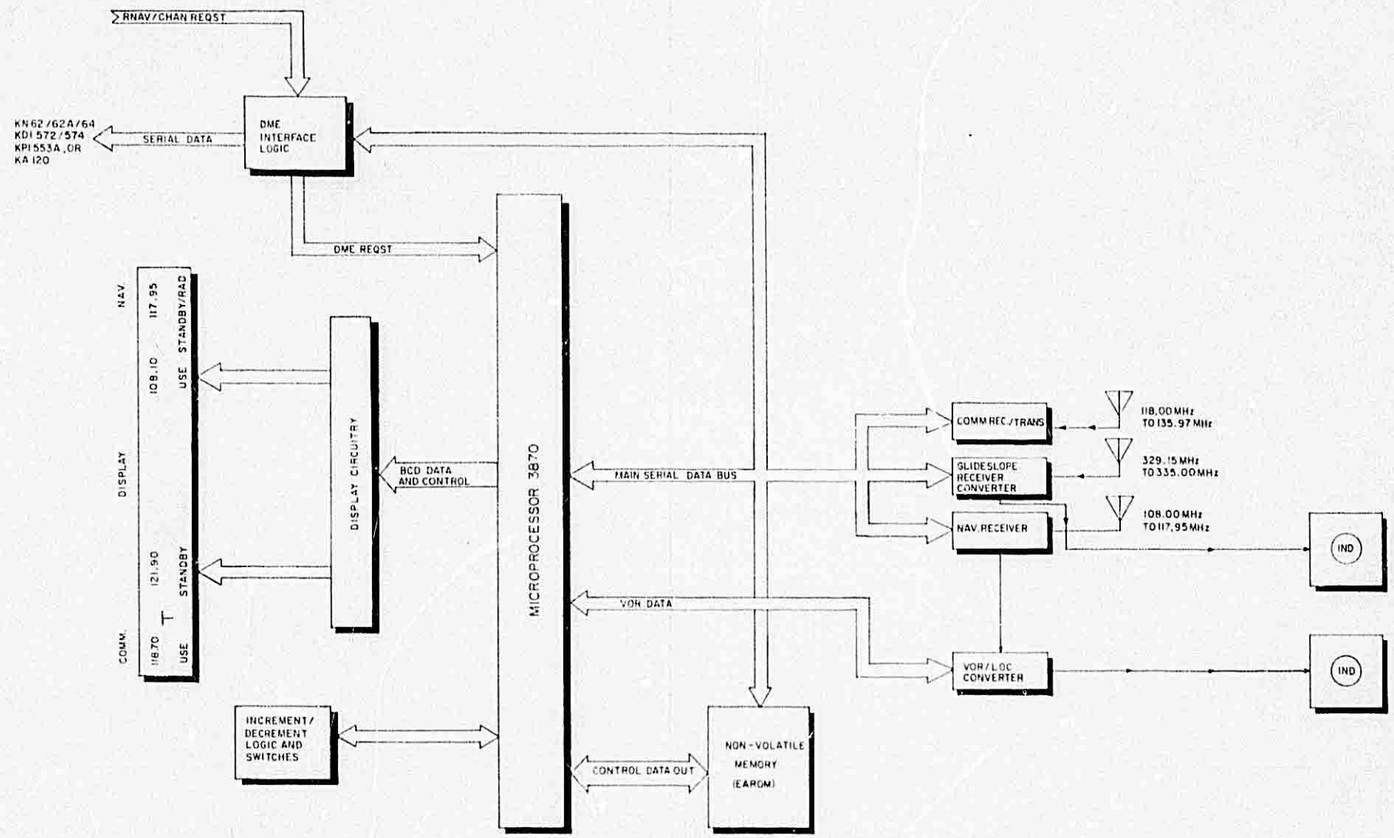

FIGURE 4-1 BASIC BLOCK DIAGRAM OF KX 165
(Dwg. No. 696-2600-00, R-1)

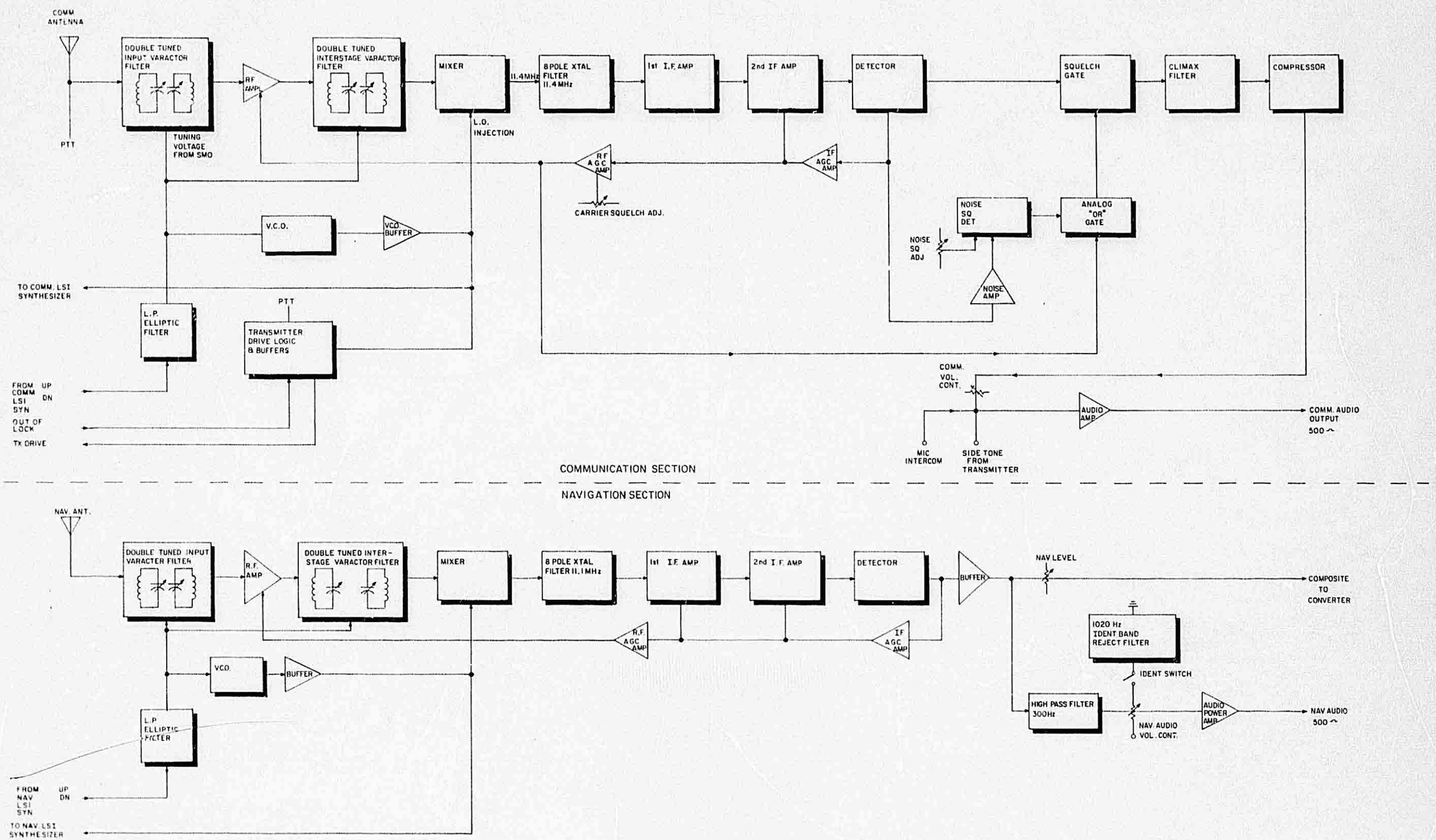

FIGURE 4-2 BLOCK DIAGRAM OF COMM/NAV RECEIVERS AND VCO'S
(Dwg. No. 696-2601-00, R-0)

4.2.2 COMMUNICATIONS RECEIVER

Figure 4-2 shows the block diagram of the receiver.

The received signal passes through part of the transmitter low-pass filter where the signal is switched to the receiver by the T-R diodes. A four pole, varactor tuned preselector suppresses the image and spurious signals. A dual gate MOS-FET RF amplifier provides low noise gain and acts as the RF AGC gain control. An active MOS-FET mixer converts the received signal to the 11.4MHz IF to be filtered by 8 poles of monolithic crystal filter. The IF signal is amplified by two integrated circuit amplifier stages, each with AGC applied. The transistor detector and squelch control gate follows the IF amplifier. Automatic squelch control with manual disable is obtained by using a carrier to noise ratio squelch with a carrier level only back-up squelch. The audio low-pass filter for "climax" environments and the audio compressor follow the squelch circuit. The output audio is amplified to 100 milliwatts into 500 ohms by the integrated circuit amplifier.

The voltage controlled oscillator receives DC control information on the coaxial cable which also carries the VCO frequency to the main board for comparison in the COMM LSI. The control voltage is low-pass filtered and applied to the varactor for frequency control. The output from the J-FET VCO is buffered and directed to:

The LSI on the main board for frequency comparison.

The receiver for local oscillator injection.

The transmit buffers.

The transmitter buffer amplifier is controlled by the PTT enable and also by the out of lock logic which will disable the transmitter in case of loss of phase-lock.

4.2.3 TRANSMITTER/MODULATOR

The transmitter block diagram Figure 4-3 shows the three stage transmitter and modulator.

When the PTT is activated the VCO frequency moves 11.4MHz down to the frequency displayed in the "USE" window. The transmit buffers are turned on and 10 watts output is obtained. The series-regulator modulator transistor is set to normally provide about half of the supply voltage to the driver and final transistor with no modulation.

Modulation will cause the modulator output to swing nearly to ground and nearly to the supply voltage. The series regulator modulator is driven by an integrated circuit amplifier following the mic audio compressor which is used to maintain a high percentage of modulation without overmodulating. A three section elliptic function type filter follows the transmitter to suppress harmonics, while a small amount of mic audio is fed to the audio output for sidetone.

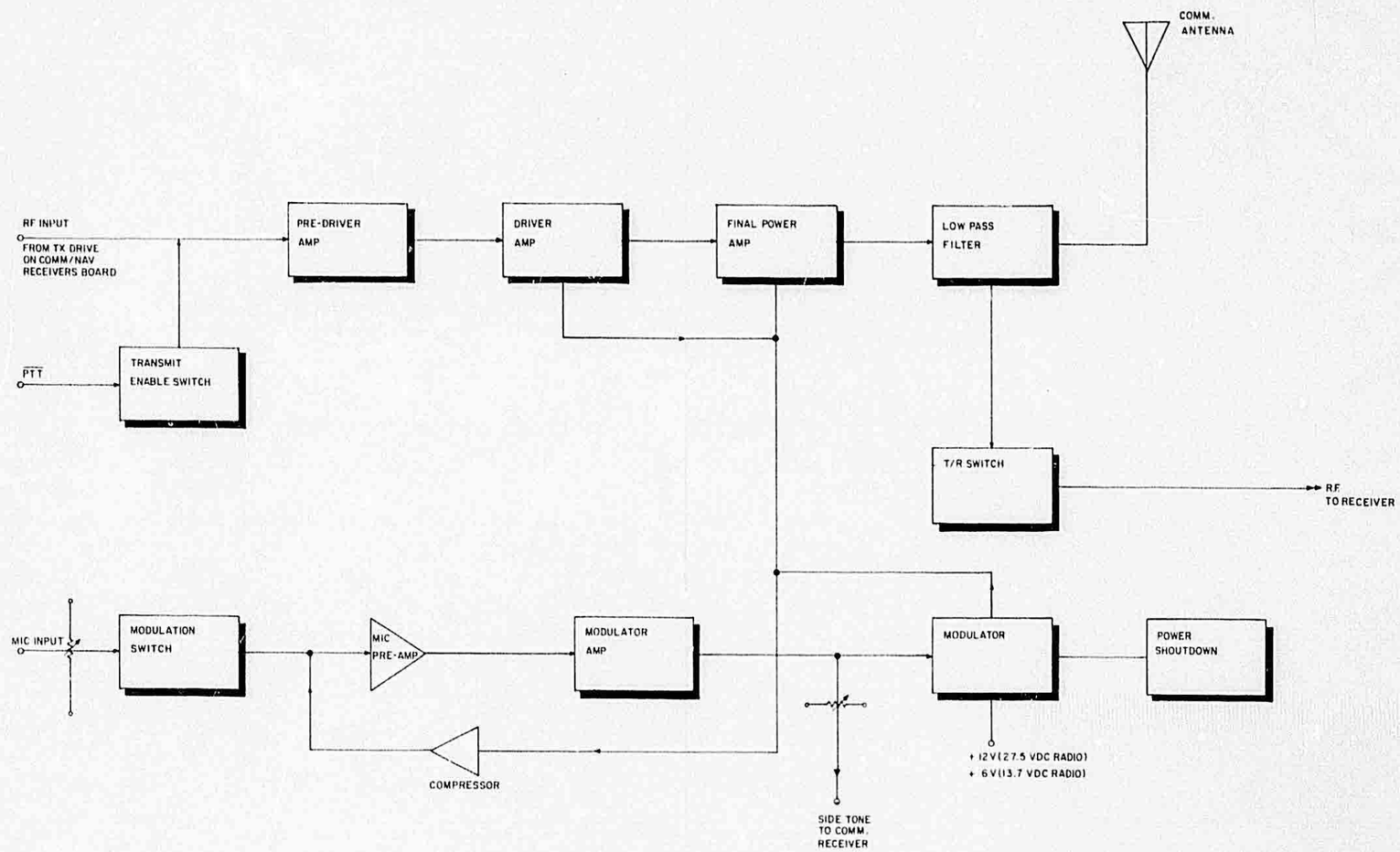

FIGURE 4-3 BLOCK DIAGRAM OF KX 165 TRANSMITTER
(Dwg. No. 696-2602-00, R-0)

4.2.4 NAVIGATION RECEIVER

Figure 4-2 shows the block diagram of the NAV receiver.

A four pole preselector tuned with varactors suppresses the image and spurious signals. The dual-gate MOS-FET RF amplifier provides low-noise gain and also acts as the RF AGC control element. A dual-gate MOS-FET active mixer converts the received NAV signal to 11.1MHz where it is applied through the 8 pole monolithic crystal filter to the two integrated circuit IF amplifiers. The signal is demodulated in the detector transistor and is fed to the AGC amplifiers, the NAV composite output buffer and the audio amplifier. The audio amplifier is capable of providing 100 milliwatts of audio to a 500 ohm load. A tone notch active filter precedes the audio amplifier and when the NAV volume control knob is pushed in, effectively removes the ident tone.

DC error signals are fed through coax from the charge pumps on the main board through a low pass filter to the VCO varactor on the receiver board. VCO signals are buffered and sent back to the LSI on the main board for frequency comparison. The VCO signal is also buffered and used to supply the local oscillator signal to the NAV mixer. The VCO operates 11.1MHz below the desired receive frequency.

4.2.5 PRINCIPLES OF VOR SYSTEM

4.2.5.1 General

The basic function of VOR is to provide a means to determine an aircraft's position with reference to a VOR ground station and also to follow a certain path toward or away from the station. This is accomplished by indicating when the aircraft is on a selected VOR station radial or by determining which radial the aircraft is on. A means to differentiate between radials and identify them is therefore necessary. For this purpose, advantage is taken of the fact that the phase difference between two signals can be accurately determined. The phase difference between two signals which are generated by the VOR station is varied as the direction relative to the station changes so that a particular radial is represented by a particular phase difference. Refer to Figure 4-4. One non-directional reference signal is generated with a phase that at any instant is the same in all directions. A second signal is generated with a phase that at any instant is different in different directions. The phase of the variable phase signal is the same as the phase of the reference signal only at the 0° radial (North). As the angle measured from the 0° radial increases, the phase of the variable phase signal lags the phase of the reference signal by the number of degrees of the angle from 0°. The reference and variable phase signals, which are 30Hz voltages, are carried by RF to make radio transmission and reception possible. The VOR receiving equipment must separate the 30Hz reference and variable phase signals from the RF carrier and compare the phase of the two signals. The phase difference is indicated on a course indicator or RMI.

4.2.5.1.1 VOR generation

The VOR electromagnetic field is composed of the radiation from two ground based antennas radiating at the same carrier frequency. The first is a non-directional antenna radiating an amplitude modulated carrier. The frequency of the modulating signal varies from 9480Hz to 10440Hz back to 9480Hz 30 times per second. That is, a 9960Hz subcarrier amplitude modulates the RF carrier and is frequency modulated by 30Hz.

The second antenna appears electrically as a horizontal dipole which rotates at the rate of 30 revolutions per second. The dipole produces a figure 8 field pattern. The RF voltages within the two lobes are 180° out of phase. The RF within one of the lobes is exactly in phase with the RF radiated from the non-directional field. The rotating figure 8 pattern reinforces the non-directional pattern on the side. See Figure 4-4. This results in a cardioid field pattern which rotates at the rate of 30 revolutions per second, the rate at which the dipole antenna rotates.

The signal received by aircraft within radio range of the VOR station is an RF carrier with amplitude varying at the rate of 30Hz because of the rotation of the cardioid pattern. The carrier is also amplitude modulated at the station by the 9960Hz signal which is, in turn, frequency modulated on a sub-carrier so that it may be separated from the 30Hz variable phase signal.

4.2.5.1.2 Principles of localizer system

The localizer facility provides a visual display of the aircraft's position relative to a straight approach line of the runway. The ground based localizer antenna system generates two patterns. Refer to Figure 4-5. One pattern is directed toward the right side of the runway, the second to the left. The two patterns have the same carrier frequency but different audio modulating signals. The pattern to the left of the runway (in normal approach) is 90Hz, amplitude modulated, while the pattern to the right is 150Hz, amplitude modulated.

The ratio of 90Hz to 150Hz audio, after demodulation, is dependent only upon the position of the aircraft within the patterns. The patterns are adjusted so they are of equal strength on a vertical plane extending out from the runway centerline. When the aircraft is on this plane, the 90Hz and 150Hz voltages are equal.

The ratio of 90Hz to 150Hz audio, after demodulation, is dependent only upon the position of the aircraft within the patterns. The patterns are adjusted so they are of equal strength on a vertical plane extending out from the runway centerline. When the aircraft is on this plane, the 90Hz and 150Hz voltages are equal.

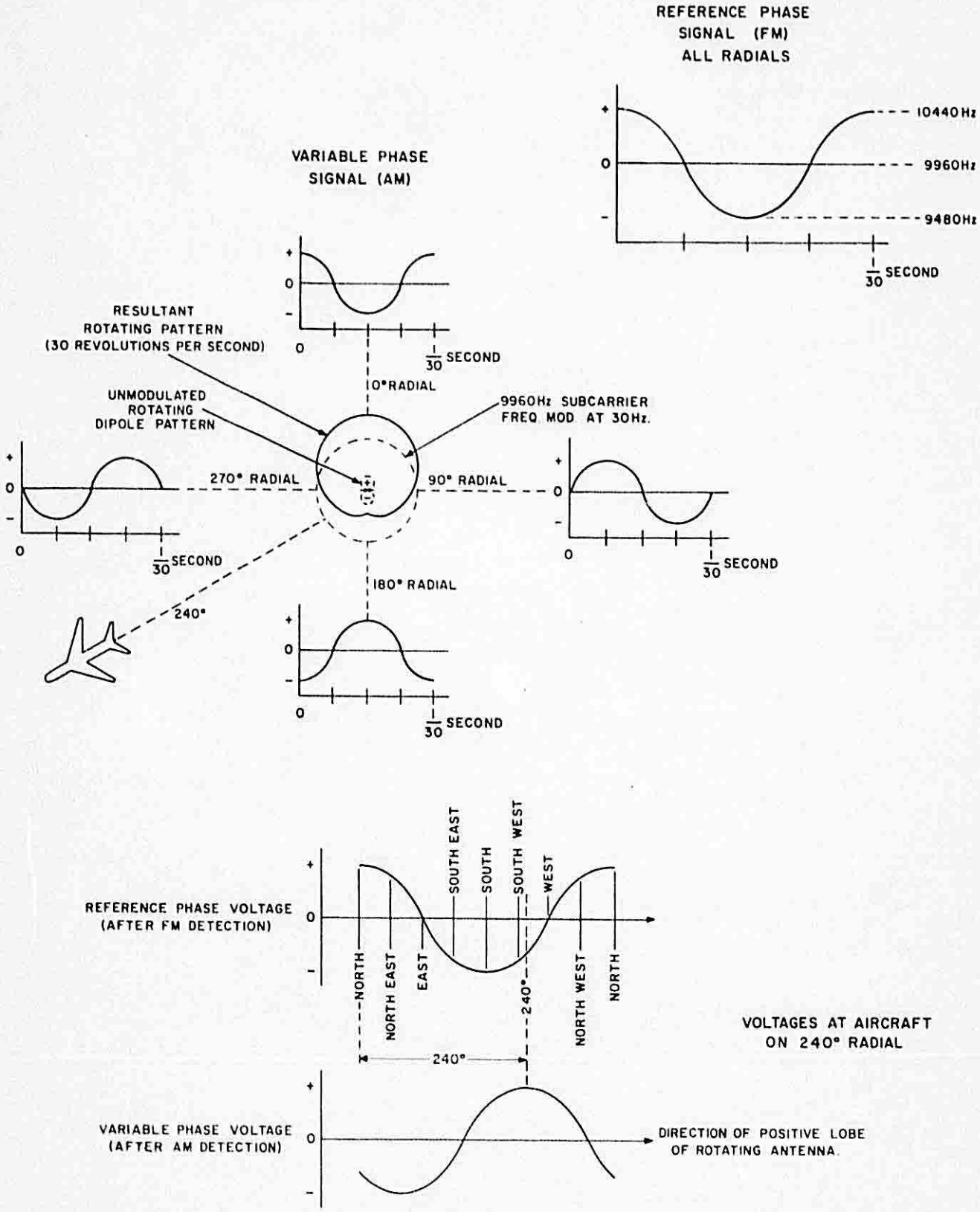

FIGURE 4-4 VOR SIGNAL GENERATION

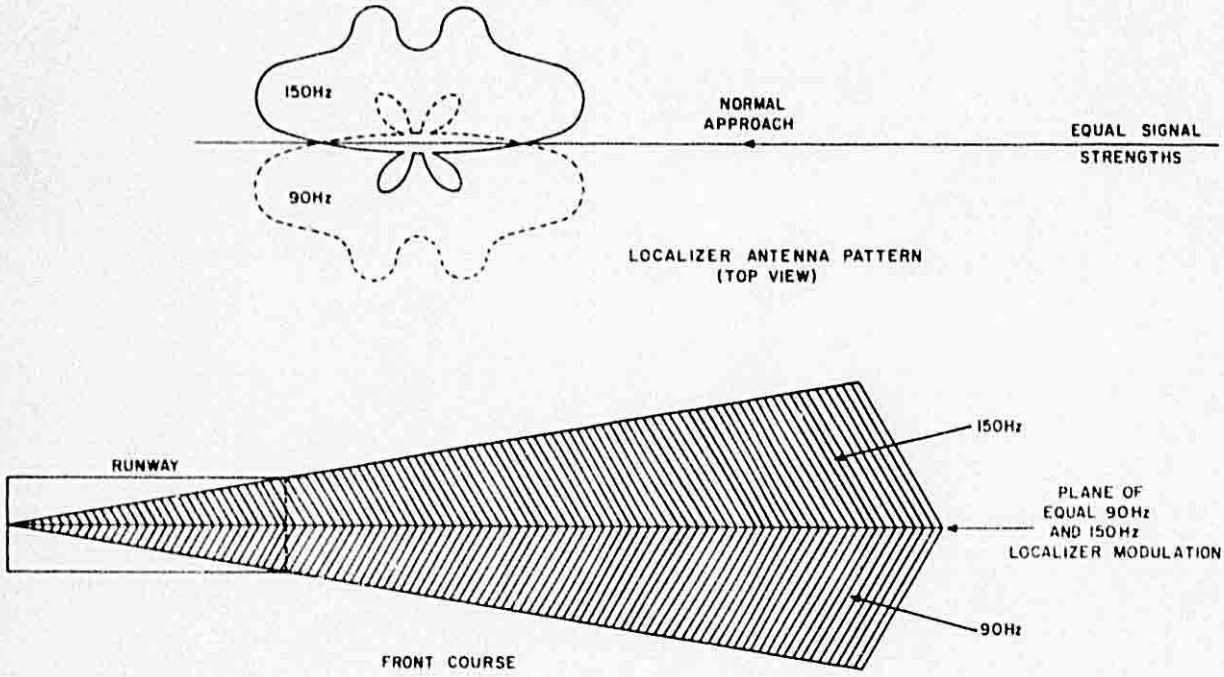

FIGURE 4-5 LOCALIZER SIGNAL GENERATION

4.2.6 NAV THEORY OF OPERATION

The navigation receiver used in conjunction with the KX 155/KX 165 receives the radio frequency energy transmitted by a VOR or ILS ground station. This radio frequency energy is demodulated and the modulation information is sent to the VOR/LOC converter. The VOR/LOC composite signal from the navigation receiver consists of the 9960Hz frequency modulated reference phase signal and the 30Hz variable phase signal if a VOR frequency is selected for the navigation receiver or 90Hz and 150Hz audio if a LOC frequency is selected.

The VOR/LOC composite is buffered by an operational amplifier, which is connected as a non-inverting amplifier. The gain is adjustable to correct for slight variations in composite levels from different NAV receivers.

4.2.6.1 VOR operation (Figure 4-6)

If a VOR frequency is selected by the navigation receiver, the VOR/LOC converter separates the variable phase 30Hz signal from the 9960 frequency modulated reference by passing the buffered VOR/LOC composite through a 30Hz bandpass filter. This variable phase filter removes all the reference phase modulation from the variable phase signal.

The buffered VOR/LOC composite is also applied to the FM discriminator, which recovers the 30Hz reference phase signal from the 9960Hz signal. The 30Hz reference phase signal output from the FM discriminator is then applied to the rotor winding of an OBS resolver.

By turning the OBS knob, the pilot also turns the azimuth card and the rotor of the resolver. The output of the stator windings of the resolver is amplitude dependent upon the mechanical position of the resolver rotor. By connecting both stator windings to an R-C network, an output voltage that is constant amplitude but phase dependent upon the position of the resolver rotor is derived. This constant amplitude variable phase signal is amplified by a low pass amplifier, and then again by a 30Hz bandpass filter. The output of the reference phase bandpass filter is then fed to a squaring amplifier.

The output from the squaring amplifier is phase compared with the output of the variable phase bandpass filter. The difference in phase of the two signals is converted to a DC voltage by the deviation amplifier which drives the external course deviation indicator.

To compare the phase of the two bandpass filter outputs, the reference phase bandpass filter output is squared and used to drive a Field Effect Transistor switch, which is connected from the output of the variable bandpass filter to an AC (signal) ground. When the output of the squaring amplifier is a large positive voltage, the switch is closed and the variable phase bandpass filter output is shorted to the AC ground. As the output voltage of the squaring amplifier approaches zero, the switch opens and the voltage output of the variable bandpass filter is integrated by a resistor and capacitor. For zero voltage out of the integrator circuit, the phase difference between the variable phase bandpass filter output and the reference phase band filter must be ninety degrees.

Voltage from the integrator is fed to the deviation amplifier which in the VOR mode is connected as a voltage follower and drives the external course deviation indicator.

In order to provide TO/FROM information to the pilot, the two bandpass filter outputs are again phase compared. However, the variable phase bandpass filter output is passed through an additional ninety degree phase shift network so that when minimum voltage is present on the deviation amplifier output, output voltage of the TO/FROM phase comparator will be maximum. Integration of the TO/FROM phase comparator output is accomplished by the TO/FROM amplifier which functions as an integrator for 30Hz signals.

Output voltages from both bandpass filters are monitored for usable signal levels by the flag detector circuit. As long as the output voltage of each bandpass filter is above the threshold set by the flag detector circuit, the flag amplifier will provide enough voltage to pull the VOR/LOC warning flag from view. When the output of either bandpass filter falls below the threshold, the flag amplifier output decreases and the VOR/LOC warning flag appears in the window.

To generate digital bearing information for the microprocessor, the 30Hz reference signal is sent to a squaring amplifier and reference 30Hz Bandpass Filter.

The resulting reference phase pulse is applied to an "exclusive OR" gate input while the other input receives a 180° control from the microprocessor. This 180° control input increases the accuracy of computing the VOR bearing when the bearing is less than 90° and more than 270°.

The output of the "exclusive OR" gate is applied to the "reset" input of an edge triggered S/R flip-flop.

The variable phase signal mentioned previously is also applied to a phase shifter amp and a squaring amplifier. The output pulse is applied to the "set" terminal of the flip-flop. The flip-flop is a rising edge trigger sensitivity. The output pulse at the "Q" pin of the flip-flop corresponds to a phase difference between the reference and the variable phase signals. The rising edge of the variable pulse sets the flip-flop while the rising edge of the reference pulse resets the flip-flop.

The output of the flag amplifier is sent to the microprocessor. The microprocessor then outputs a signal to display a flag.

The 30Hz pulse width signal at the Q pin of the flip-flop is simultaneously sent to the microprocessor.

4.2.6.2 Localizer operation (figure 4-6)

When an ILS frequency is selected by the navigation receiver, the ILS energize line from the receiver is a low impedance to ground. This control line switches the VOR/LOC converter from the configuration for VOR operation to the configuration required for localizer operation.

Output LOC composite from the input buffer amplifier passes to the variable phase bandpass filter as in VOR operation. The center frequency of the filter is now 90Hz. Changing the center frequency is accomplished by sensing the ILS energize input from the navigation receiver.

In the localizer configuration, the buffered composite is passed through a low pass filter then fed directly to the reference phase bandpass filter. By sensing the ILS energize input, center frequency of the reference phase bandpass filter is switched to 150Hz.

Proper steering information in the localizer mode is obtained by comparing the difference in output levels of the two bandpass filters. The difference in amplitude of the two filters is detected by the localizer detector circuit. The output from the localizer detector is connected to a field effect transistor switch that is controlled by the ILS energize input from the navigation receiver. In localizer operation, the control input of the localizer detector switch causes the switch to be closed which results in the output of the localizer detector being applied to the deviation amplifier. For localizer operation, the deviation amplifier integrates the output of the localizer detector. Thus, a DC voltage proportional to the ratio of 90Hz to 150Hz in the input LOC composite is formed.

The output of both bandpass filters is the summed together in localizer operation to provide voltage to pull the VOR/LOC warning flag from view. If the summed voltage from the bandpass filters falls below a usable level, the output voltage of the flag amplifier will not be great enough to pull the warning flag from view.

The squaring amplifier and the TO/FROM amplifier are both disabled in localizer operation by the ILS energize input.

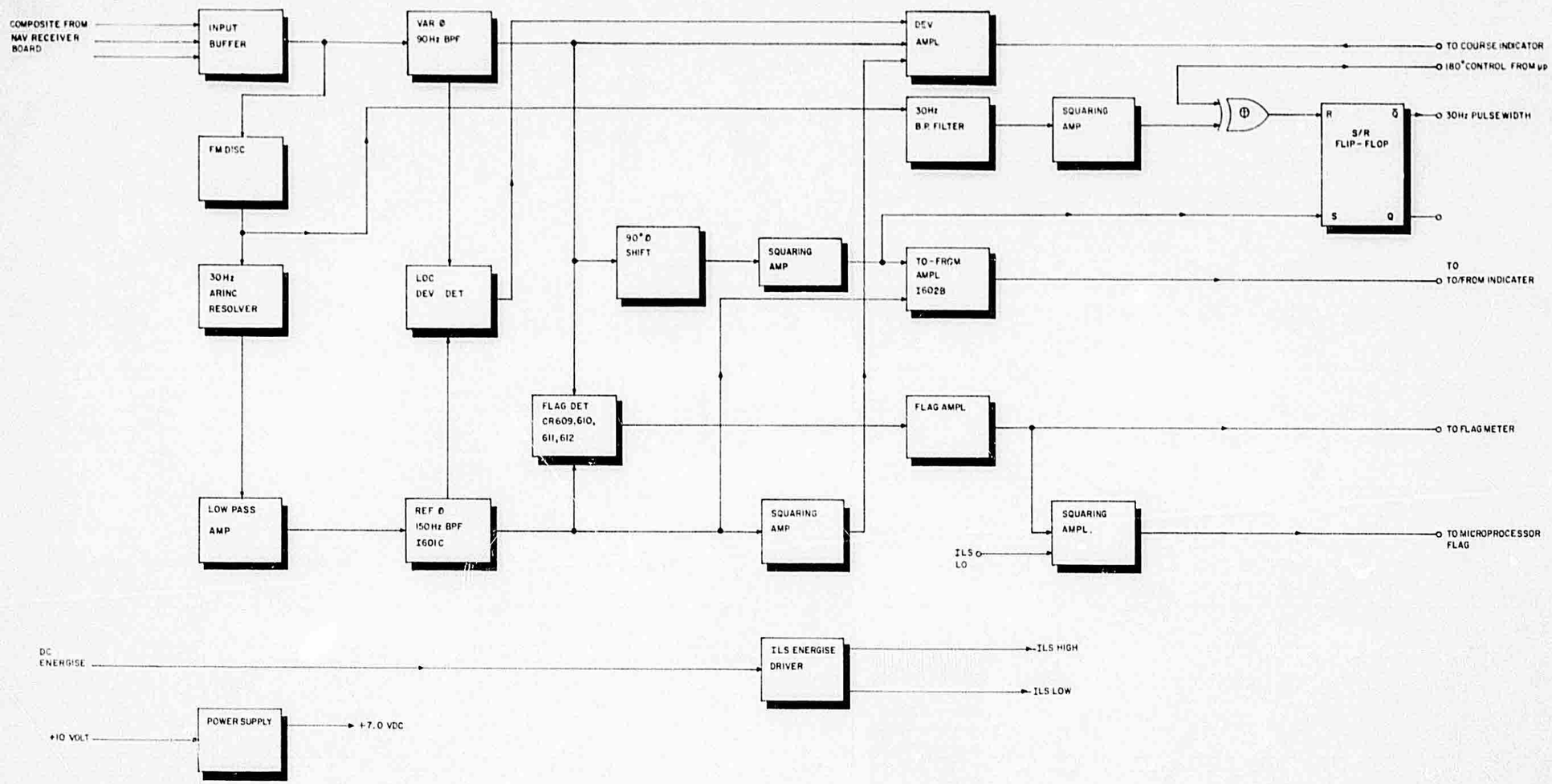

FIGURE 4-6 KX 165 VOR/LOC CONVERTER BLOCK DIAGRAM
(Dwg. No. 696-2603-00, R-0)

4.2.6.3 Principles of the glideslope system

The glideslope signal is radiated by a directional antenna array located near the approach end of the runway. The signal consists of two intersecting lobes of RF energy. The upper lobe contains 90Hz modulation and the lower lobe contains 150Hz modulation. The equal tone amplitude intersection of these two lobes forms the glide path. A typical glide angle is 2.5 degrees. If the aircraft is on the glide path, equal amplitudes of both tones will be received and the deviation bar will be centered. If the aircraft is above the glide path, 90Hz modulation predominates and the visual display is displaced down-ward. If below the glide path, 150Hz predominates and the display is displaced upward.

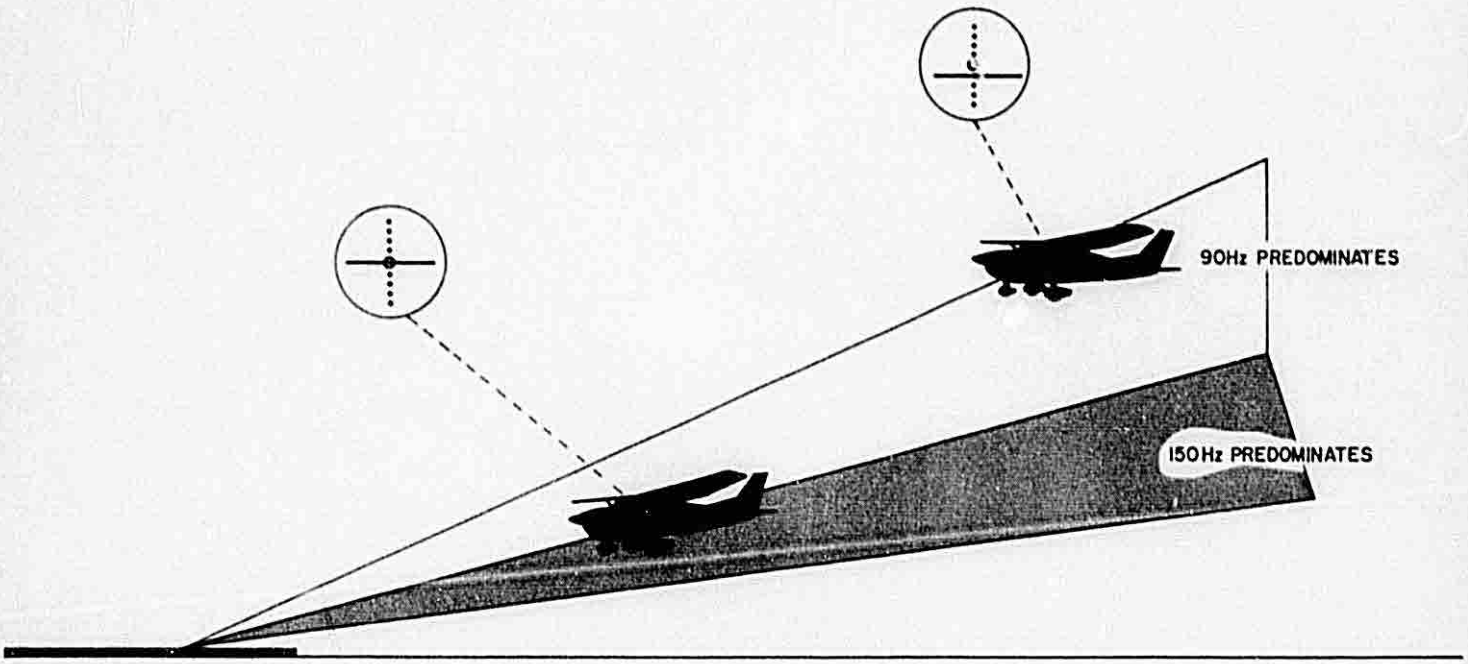

FIGURE 4-7 GLIDESLOPE

4.2.6.4 Receiver (See Figure 4-8)

The glideslope signals in the range of 329.15MHz to 335.00MHz are coupled from the antenna to the first RF amplifier. The desired signal is amplified in this tuned RF amplifier and coupled to the second tuned RF amplifier for increased amplification. The signal from the SMO is mixed at half frequency with the incoming signal producing the intermediate frequency of 33.3KHz in this single conversion receiver. The signal is now passed into the +60KHz low pass IF filter and subsequently into the first, second, third and fourth IF amplifiers at a center frequency of 33.3KHz. The output of the fourth IF amplifier is fed to the detector where the 90Hz and 150Hz modulation is removed from the 33.3KHz IF. The output of the detector is routed first to the IF AGC amplifier and then to the third IF amplifier through a low pass filter. This is to provide for IF AGC action. The output of the IF AGC amplifier is sent to the RF AGC amplifier, where the output is routed to the first and second RF amplifiers to provide RF AGC control.

4.2.6.5 Deviation converter

The composite 150Hz and 90Hz signal is now applied to the course width amplifier which has a gain of less than one. From here the composite signal is separated into the 90Hz and 150Hz components by the two active filters.

The two separated signals are passed through their own individual peak detectors and then are summed and fed through the deviation-bar driver. A DC voltage is provided by the driver to the indicator. The DC voltage is proportional to the amount of voltage created by the presence of various amounts of 150Hz and 90Hz signals.

The outputs of the 90Hz and 150Hz active filters are also passed into two more peak detectors. A separate peak detector is provided for each frequency. The outputs of the two peak detectors are summed and fed into the flag driver. Again the DC voltage output of the driver is used to drive a visual indicator which provides a warning indication when signal strength is too weak or when only one of the two modulation components is present.

4.2.7 ISOLATION AMPLIFIER

Refer to the block diagram Figure 4-13.

The KX 155/165 Audio Amplifier Board consists of a summing amplifier section and a audio power amplifier section. The summing amplifier section combines the NAV audio of the KX 155/165 with the ADF and auxiliary audio inputs. The audio power amplifier drives an external speaker.

4.2.8 POWER SUPPLY

The 27.5VDC or 13.75VDC from the aircraft bus is fed to the main board through a switch on the volume control shaft, then through a fuse and hash filter (See Figure 4-9).

A power transistor provides a regulated 12 volts for the modulator, transmitter and audio power amplifier. A switching regulator provides power for the remaining sections.

One output of the hash filter is routed to a DC reference regulator, where +5 volts regulated DC is provided. The output of the +10 volts rectifier/filter and the +5 volt regulated reference DC are applied to the error amplifer. The output of the error amplifier is a pulse, which is applied to the pulse width modulator through a loop filter. The loop filter provides a DC level to the pulse width modulator.

A 15KHz oscillator applies a triangular pulse to the input of the pulse width modulator. The pulse width modulator generates pulses with a pulse width correspondent to a DC biasing existing at its inputs. The power transistor amplifier sends the pulses to the secondary of the switching transformer through the primary. The power at the secondary is a pulsed waveform. This waveform is rectified and filtered at different secondary terminals to provide 192VDC, +5VDC, -26VDC and +10VDC.

The output of the +10 volt rectifier and filter is regulated by an op amp circuit to produce +9VDC.

A current limiting circuit protects the power transistor amplifier against excessive currents. When excessive current is sensed through the power transistor, the current limiter forces the pulse width modulator to generate shorter pulses. These short pulse widths then back down the output power from the power supply.

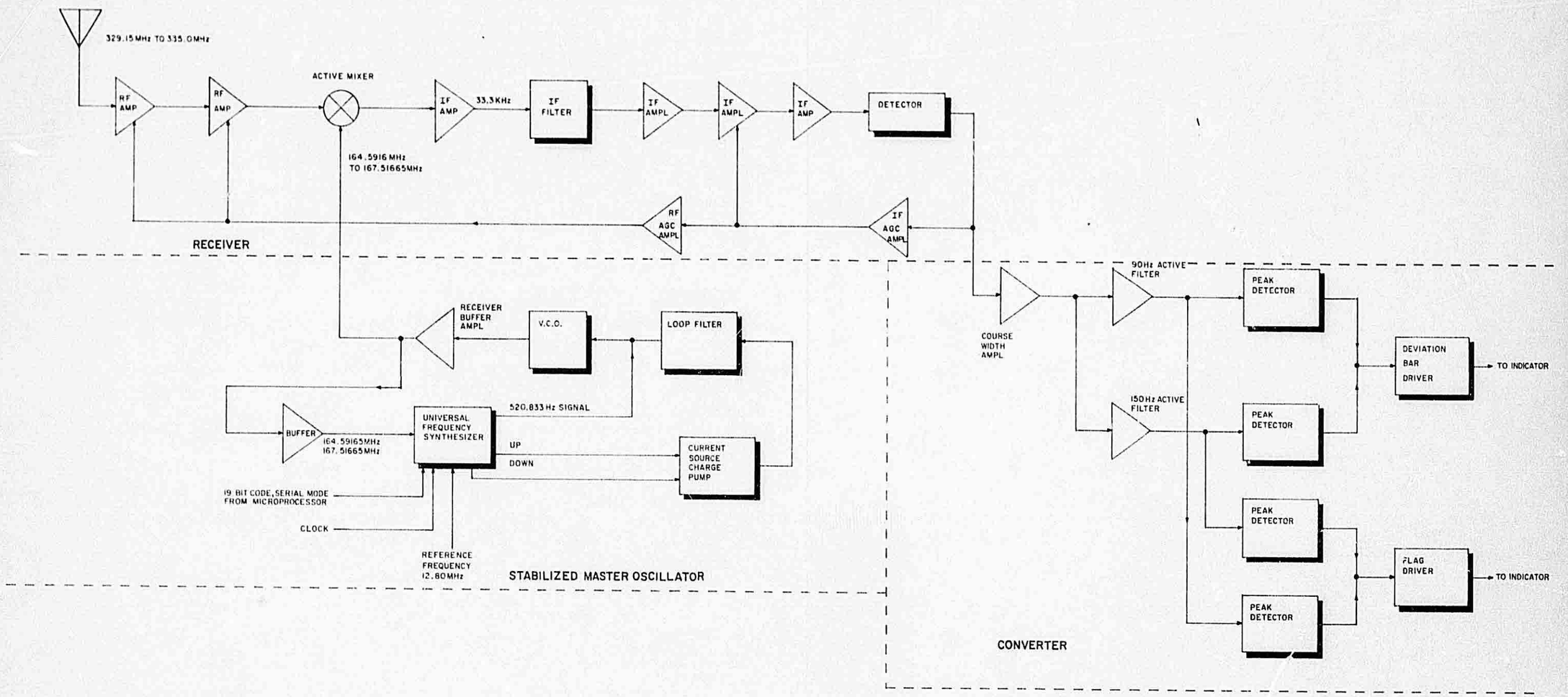

FIGURE 4-8 KX 165 GLIDESLOPE RECEIVER BLOCK DIAGRAM
(Dwg. No. 696-2604-00, R-0)

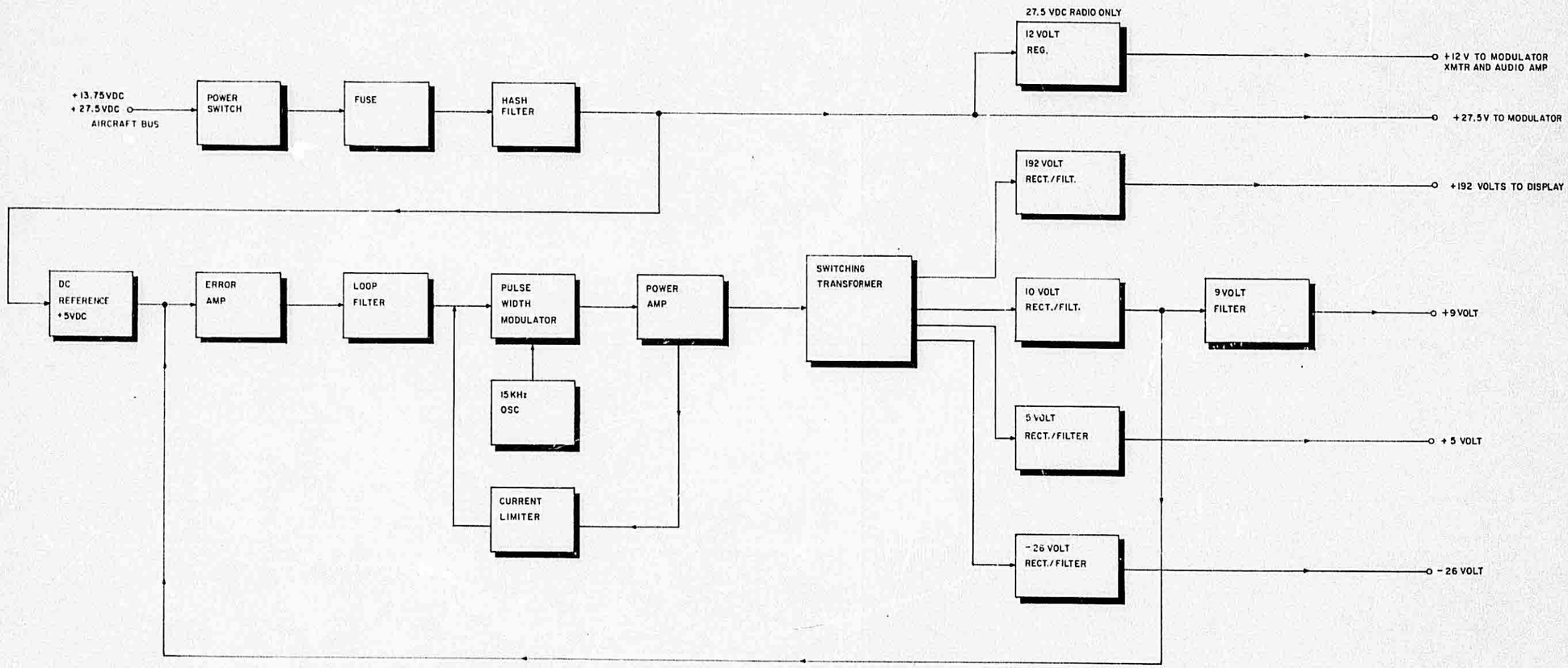

FIGURE 4-9 KX 165 POWER SUPPLY BLOCK DIAGRAM
(Dwg. No. 696-2605-00, Rev. 0)

4.3 DETAILED CIRCUIT THEORY

4.3.1 MICROPROCESSOR (μP) CONTROL

Refer to the main board schematic for circuit diagram. Figure 6-25 & 27.

The microprocessor controls the functions of the following blocks:

A. Communication LSI Synthesizer
B. Navigation LSI Synthesizer
C. Glideslope LSI Synthesizer
D. Display Control
E. Non-Volatile Memory
F. Increment/Decrement Switches
G. DME Channeling
H. VOR Radial

4.3.1.1 Communication LSI synthesizer

The microprocessor sends a 19 bit serial data to the COMM LSI, pin 7. This binary code provides the divide ratio to the LSI. The LSI divides a reference signal frequency by the divide ratio provided by the microprocessor. The resulting signal is used as a reference phase signal.

The serial data clock pin 5 and the strobe pin 10 signals enable the COMM LSI to receive the serial data from the microprocessor at pin 7.

The output of the COMM VCO (Voltage Controlled Oscillator) is applied to the COMM SMO buffer through C282 and C442 to the base of transistor Q413. Q212 and Q413 are the active components of the buffer that provides isolation for the VCO. The LSI receives the output of the SMO buffer at pin 11, divides its frequency by a divide ratio from the microprocessor. The output is a variable phase signal.

The reference and variable phase signals are compared in a phase comparator with the difference between the "Up" and "Down" tuning pulses. The "Up" and "Down" pulses are then applied to the COMM VCO charge pump Q440, Q441 and Q442.

4.3.1.2 The NAV LSI synthesizer

The NAV LSI operates in the same manner as the COMM LSI. The command signals, same as the COMM LSI synthesizer, but with a different serial data to preset the divide ratio of the internal counters are sent to the LSI. It also receives a different strobe signal at pin 10.

The output of the NAV VCO is applied to the NAV SMO buffer, Q414, through capacitors C367 and C451. The output of the buffer is capacitively coupled to the LSI. The resulting "Up" and "Down" tuning signals are then applied to the NAV VCO charge pump Q443, Q444 and Q445. Resistors R383 and R384 bias the base of Q307; R388 and R387 bias the base of Q308.

4.3.1.3 Glideslope LSI synthesizer

The LSI operates nearly the same as the COMM and NAV LSI, except it receives a different strobe and serial data from the microprocessor to preset the divide ratio of its counters.

The glideslope LSI also generates a 520.8333Hz signal that is used to frequency modulate the glideslope VCO. This would eliminate the zero beat problem. Further explanation will be found in detail under the Glideslope Theory of Operation, 4.3.9.

4.3.1.4 Display

The display is a gas discharge type with four sections allocated to display COMM, NAV and radial information. During COMM transmit/receiver mode of operation, a "Use" frequency, which is the active operating frequency, is displayed in the COMM "Use" window. A standby frequency which can be exchanged with the "Use" frequency is displayed in the "Standby" window. The letter "T" is displayed between the "Use" and "Standby" during transmit.

The NAV frequencies are displayed in the "Use" and "Standby" windows in the same manner as the COMM frequencies. During VOR operation, the radial information is displayed in the "Standby" window with the active frequency displayed in the "Use" window.

The microprocessor simultaneously feeds two BCD codes corresponding to the COMM and NAV information through pins 12 thru 15 for COMM and pins 8 thru 11 for NAV to a high voltage cathode decoder/drivers I402 and I403 respectively. The BCD code is decoded to seven segment decimal code while current programming of the drivers is applied to pin 1 of I402 through resistor R424 and pin 1 of I403 through resistor R425. Pin 6 of each decoder receives the decimal point signal from the microprocessor.

The driver part of I402 and I403 provides programmed current sinking for the cathode of each segment. Refer to the main and display board schematics for the display circuitry.

The most significant digit of any information displayed in any window is always 1 and therefore, the 16 digits in 4 windows are paired. The resulting 8 pair digits are multiplexed by the microprocessor. A mux clock and mux sync is applied to the 1 of 8 counter, I102. Pin 8 of I102 is connected to an AC ground (100 volts above zero). The CE (pin 13) is connected to AC ground so that each clock pulse applied to pin 14 will advance the counter by 1. Mux sync is applied to pin 15 of I02 to reset the counter. The mux clock frequency, which is approximately 1KHz, will vary slightly while the mutliplex rate is approximately 125 times per second.

The microprocessor then sends the BCD data for each digit. By enabling the anode of the desired digit through the multiplex counter, the proper digit receives the data and displays it. It should be noted that the high and low level voltages for I102 are "0" volts and "9" volts DC. The voltages for I101 are 100 volts DC (AC ground) and 192 volts DC respectively. The high and low level voltages for the output of the cathode drivers are 0 volts DC and 80 volts DC. A segment is therefore turned on by approximately 180 volts DC differential across it while in an off state it receives approximately 20 volts DC. This 20VDC is not sufficient to fire a gas discharge type display.

The dimming of the display is accomplished automatically. The output voltage of the photocell (located on the front panel) is fed to a current converter, I405. I405 converts voltage into current which establishes a current source. To set the minimum and maximum brightness for the display, variable resistor R438 is adjusted to control the amount of current being sourced. The output of I405 is applied to a dual timer I406.

The microprocessor sends mux clock pulses at a rate of approximately 1KHz. These clock pulses are applied to the "reset" and "trigger" terminals pins 4, 6 and 8 of I406 as trigger signals. Since the mux clock varies constantly, I406 will one-shot the pulse to provide a constant pulse length. Thereby eliminating any flickering of the display due to different mux clock pulse lengths. The output pulse width can be adjusted by resistor R438 and pulse width modulated by CR408. The output of I406 is then applied to another voltage-to-current converter I405. Capacitor C421 then charges up to a level corresponding to the duty cycle of the received pulses. The output current of I405 is then applied to the current programming terminal pin 1 of the cathode drivers, I402 and I403. The brightness of the display is controlled by the current sent through each segment. The total dimming ratio varies from 48:1 to 24:1. The pulse width modulation output of I406 is also used to pulse the power to the anode driver, I106, providing positive turn off of segments. This is accomplished thru Q101 and Q102. Q102 doubles as a current limiter.

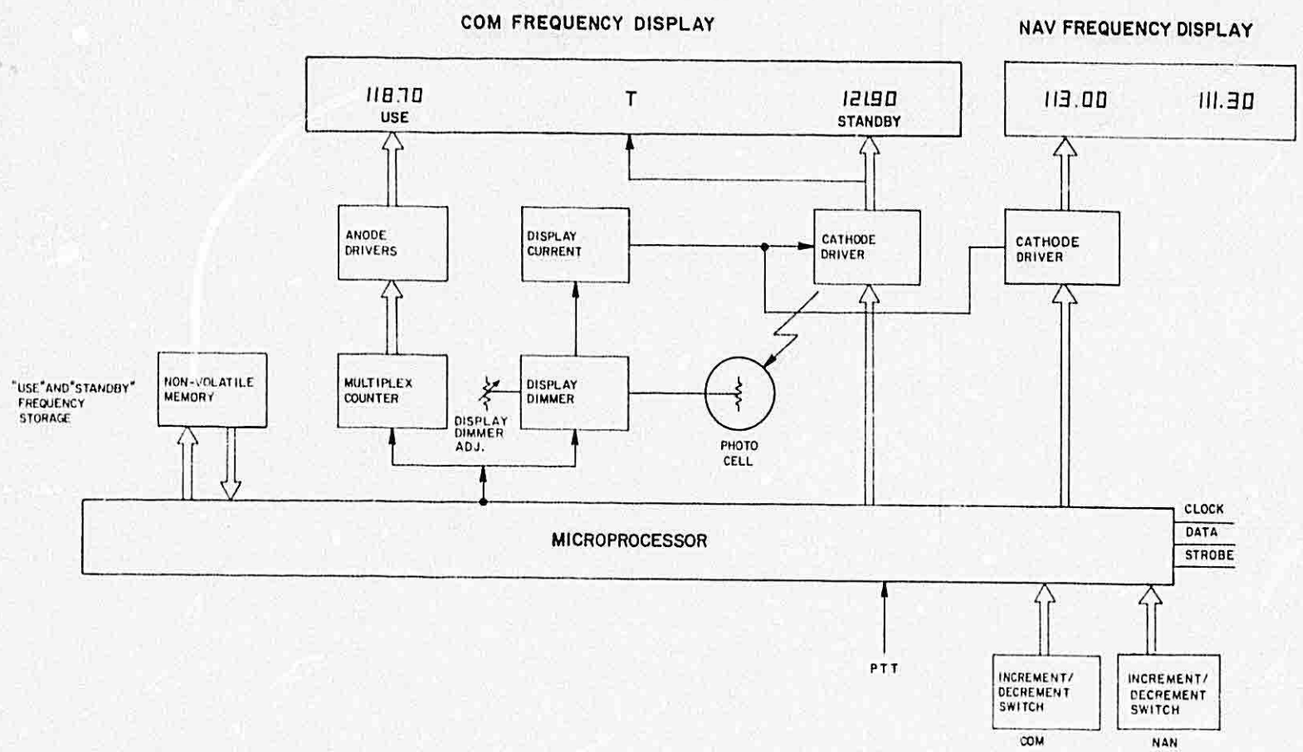

FIGURE 4-10 MICROPROCESSOR CONTROLLER AND DISPLAY
(Dwg. No. 696-2606-00, R-0)

4.3.1.5 Non-Volatile memory

The non-volatile memory, I412, is an electrically alterable read only memory (EAROM) with a capacity of 100 X 14.

The microprocessor sends a three bit binary code in parallel mode to I412 through inverters I404C, I404D and I404E. The non-volatile memory operates with negative logic +9 volts DC for a logic 0 and 0 volts DC for a logic 1. The three inverters translate the logic from the microprocessor to the memory. This three bit code determines the mode of operation for the memory as listed in Table 4-1. Inverter I413B translates 9 volts to 5 volts DC for CMOS. The "AND" gate I417C sends 12.5KHz clock pulses to the memory through I404B.

The microprocessor sends a 20 bit address code in serial mode through buffer I414A to the bi-directional I/O port pin 12, I412. When data or address is transferred into the memory, terminal C_2 pin 8, which is in logic "1" state, turns on Q427 connecting pull-up resistor R447 to the output of I414A. Each bit of the 20 bit address code is transferred into address registers with each clock pulse. The data to be written into the memory is also transferred in the same manner.

The microprocessor sends each 14 bit frequency data to be stored in the memory in serial mode. Then reads out 14 bits of data in a serial mode. Transistor Q427 is turned off during read operation since pin 8 of I412 is a low level logic (+9 volts DC).

C1	C2	C3	FUNCTION
0	0	0	Standby - Contents of address and data register remains unchanged. Output buffer is left floating.
0	1	1	Accept Address - Data presented at the I/O pin is shifted into the address register with each clock pulse.
1	0	0	Read - The address word is read from memory into the data register.
1	0	1	Shift Data Out - The output driver is enabled and the contents of the data register are shifted out one bit with each clock pulse.
0	1	0	Erase - The word stored at the addressed location is erased to all zeros.
1	1	1	Accept Data - The data register accepts serial data presented at the I/O pin. The address register remains unchanged.
1	1	0	Write - The word contained in the data register is written into the location designated by the address register.
0	0	1	Not Used.

TABLE 4-1 MODE OPERATIONS OF THE NON-VOLATILE MEMORY

4.3.1.6 Microprocessor reset logic

During normal operation the output of I420B at Pin 1 is 0 volts DC. I420B Pin 3 is biased to 2.5 volts DC. The circuit voltage at Pin 2 of I420B is 2.8 volts DC. Q406 is turned off. When the voltage at Pin 2 of I420B goes below 2.5 volts DC (Due to power on and power off and low voltage transients) the output at Pin 1 of I420B will go to approximately 5 volts DC, which turns on Q406 and forward biases CR416. C481 discharges through Q406 resetting the microprocessor and resetting the non-volatile memory. R450 limits the current flowing in Q406.

4.3.1.7 Increment/Decrement switches

In order to monitor the states of eight switches, a 2 bit binary code, pin 3 and 4 of the microprocessor, is decoded by a 2 to 4 active decoder I409. The microprocessor sends the sync signal, pin 5, to the enable terminal of the decoder. The same 2 bits of binary code are sent through inverters I413A, I413C, I413D and I413E to the LSI synthesizers, VOR/LOC converter and glidaslope receiver. The strobe signals to the two LSI synthesizers are used for synchronizing the switch activities with the LSI's operations.

Increment/decrement switches S104A, S104B, S105A and S105B are paralleled connected to the NAV transfer switch S401, radial S402, COM transfer switch S403 and the 25/50KHz switch S404. The 2 bit binary code acts like a 2 bit binary counter (00, 01, 10, 11). Every one millisecond it places a logic "0" on each one of the four outputs of the decoder. Should any of the four switches, S401, S402, S403 or S404 be closed, the current would flow into their respective diodes and pin 19 of the microprocessor would go to a logic "0" by pulling down resistor R444. The microprocessor will then send the proper instructions to the corresponding units by processing this signal. Diodes CR432, CR433, CR434 and CR435 ascertain that only one switch at a time is monitored by the microprocessor during each state of the 2 bit binary code. The normal logic levels on pins 16, 17 and 18 of the microprocessor is a logic 1 (high). When any of the wipers of the switches S104A, S104B, S105A and S105B are rotated, three pulses are sent to the microprocessor by momentarily pulling pins 16, 17 and 18 of the microprocessor to a logic "0". If the sequence of the received pulses is correct, the microprocessor then sends the increment/decrement commands to their respective units.

4.3.1.8 DME channeling

The KN 62/62A/64, KDI 572, KDI 574 can be directly interfaced with the KX 165. The microprocessor sends tuning data in the form of a binary code to the external DME unit.

When the select line is grounded a low input is applied to "wired OR" gate R481, R483, R571, CR438, CR439, CR442, and CR443. With a RNAV/GAIN request at L414, the low signal out of CR443 determines the output of I413F pin 10. This output is then a high and routed to the "AND" gate I417D.

The output of I417D pin 10 is therefore a high which is sent to the microprocessor I407 pin 32 DME request.

4.3.1.9 VOR radial

When the inner (KHz) knob of the Nav Increment/Decrement switch is pulled out the microprocessor will display the radial from the station. The microprocessor receives VOR 30Hz pulse width and VOR flag signals on pins 38 and 31 respectively. The microprocessor then sends a 180° control signal pin 30 of the microprocessor to the VOR converter. This control signal is used to provide a greater bearing accuracy when the VOR radial is more than 90° and 270°. The VOR information is then processed in the microprocessor. When the NAV KHz switch is pulled out, the radial information output is then displayed in the "STANDBY/RAD" window of the NAV section.

VOR digital radial data in serial form is available on the main serial data bus of the KX 165. This information is in the form of a 3 bit identifier followed by four bits of BCD words with the most significant bit (MSB) of the most significant digital (MSD) first. This radial information can then be used for a remote mounted indicator such as the KI 229.

4.3.2 COMMUNICATION RECEIVER

Refer to the COMM/NAV Receiver schematics, Figure 6-7 ,9 ,15 & 17.

4.3.2.1 Antenna input circuit

In the receive mode, one side of R201 is switched low by PTT, thus causing Q200 to conduct through the T/R diodes CR802 and CR803 which are located on the transmitter PC board. The desired signal passes through the low pass filter, then through CR802 and CR803 to the receiver PC board where C203 steps up the impedance to match the first pole of the preselector. Matched Varactor diodes CR200A and CR200B tune the double tuned circuit to the desired frequency. The desired signal is coupled to gate 1 of the RF amplifier through C208.

4.3.2.2 RF amplifier

Q201 is a dual gate, enhancement mode, N-channel field-effect transistor with internal diodes to protect the gates against damage due to transients during handling. It provides the necessary high gain, low noise figure, good cross modulation, immunity and wide AGC range required in this amplifier. Gate 1 has a positive bias with respect to the source so that the quiescent operating point provides maximum gain when gate 2 is near the supply voltage. As gate 2 voltage is decreased to near 0 volts, the FET has approximately 40dB of attenuation thus providing more than 50dB of AGC range. C214 couples the signal into the double tuned inter stage bandpass filter. Matched Varactor diode CR200C tunes the circuit and inductor L205 provides the coupling between the two poles. This coupling improves the image rejection in the front end.

4.3.2.3 Mixer

The mixer input circuit is tuned by matched varactor CR200D. Capacitor C222 couples the desired signal to gate 1 of the mixer. The mixer is a N channel depletion mode dual gate FET. Both gate 1 and gate 2 are biased positive with respect to the source by the same amount. The local oscillator signal is fed into gate 2 at approximately 1 volt peak-to-peak. The FET provides more than 20dB of isolation between gate 1 and gate 2. The drain is tuned to 11.4MHz by T201 which also matches the FET into the 4100 ohm crystal filter. The desired signal is now at 11.4MHz due to the L.O. being 11.4MHz above the incoming signal.

4.3.2.4 First IF amplifier

The crystal filter provides the desired narrow bandpass for the receiver. The signal passes through the crystal filter and is coupled through T202 to the input of I200, the IF amplifier. AGC current is applied to pin 5 and provides approximately 40dB of AGC range. Transformer T203 tunes the collector circuit to 11.4MHz and provides the impedance stepdown required to match into the second IF amplifier.

4.3.2.5 Second IF amplifier

I201 is the second IF amplifier. It provides the necessray gain, AGC, and output capability required to drive the detector. Forward AGC is applied to pin 5 through R229 and provides up to 40dB of range. Transformer T204 tunes the collector to 11.4MHz and matches to the detector.

4.3.2.6 Detector

Transistor Q204 is the amplitude modulation detector. It is biased near collector cutoff by transistor Q203, which is diode connected to provide stable bias and temperature compensation.

4.3.2.7 IF AGC circuit

AGC voltage is derived from the average value of the detector collector voltage. Operational amplifier I202B compares this voltage with the DC reference from R244 and R245, amplifies it, filters out the audio variations, inverts it and feeds it back to the 1st and 2nd IF amplifiers. Thus, as the detector collector voltage decreases (with an increase in signal level), the AGC voltage increases which decreases the gain in the second IF amplifier. Test point TP202 is provided for easy access to this voltage.

4.3.2.8 RF AGC circuit

Delayed AGC is provided for the RF amplifier by I202A. The RF input level at which the RF AGC begins to take effect is set by R249. The RF AGC voltage can be measured on TP203. As the IF AGC voltage exceeeds the set reference, the RF AGC voltage decreases, thus decreasing the gain in the RF amplifier.

Component designations in parentheses relate to KX 155's or KX 165's with -10 version receiver boards or -00 version receiver boards in radios with Mod 9.

4.3.2.9 Noise and Carrier squelch circuit

Transistor I203D (Q227) amplifies the noise from the collector of the detector and limits its amplitude so that impulse spikes (such as ignition noise) will not be of higher amplitude than other noise. The output is lightly coupled to the tuned circuit L210 and C253 which is tuned to approximately 8KHz. Transistor I203C (Q226) detects the noise at 8KHz, that is passed by the filter, amplifies it and feeds it to the base of transistor I203A (Q224). Resistor R261 is set so that the detected noise causes the base voltage of I203A (Q224) to be low and its collector voltage to be high. Therefore, Q206 is "on" and no emitter current is supplied to the squelch gate of Q205 and no audio signal is allowed to pass.

When a signal is received, the noise output from the detector decreases; thus less noise is being fed to the noise detector I203C (Q226). Its collector is allowed to rise until transistor I203A (Q224) conducts, decreasing the base voltage of Q206, thereby supplying emitter current for the squelch gate, Q205, and allowing the received audio to pass.

Switch S102 is coupled to the volume control shaft to allow the operator to open the squelch gate manually. When the shaft is pulled out, switch S102 closes, shorting the collector of the noise amp I203D (Q227) to ground, causing the collector of I203C (Q226) to rise toward the 9 volt supply, which turns on I203A (Q224). This opens the squelch gate to allow the audio signal to pass. Carrier operated or back-up squelch operation is available when the received signal has a great deal of noise on the carrier; thus the noise detector keeps the squelch gate closed. As the carrier level increases to exceed the reference set by R249 "Carr Sq Adj" and the RF AGC voltage decreases, transistor I203B (Q225) turns "off" causing I203A (Q224) to turn "on". Again, as the collector of I203A (Q224) decreases, Q206 is turned "off", and squelch gate Q205 allows the received audio to pass.

4.3.2.10 Audio low pass filter

Inductor L209 and its associated capacitors form a low pass, ellipitcal filter. The design is such that a half power point occurs at 2.5KHz and a null occurs at 5KHz. The null, which is better than 25dB down, provides attenuation of audio hetrodynes which may occur in "Climax Network" environments.

4.3.2.11 Audio compressor

The received signal is coupled through C244 to the input of I304A pin 2. The resulting AC signal is then applied to I304 pin 6. The biasing for I304A and I304B is inputted on pins 3 and 5 at different voltage levels. If the resulting AC signal exceeds the compressor attack level, which is between 10 and 20% modulation, the signal is rectified turning Q220 on. This holds the audio output level relatively constant regardless of any modulation level above the attack level.

4.3.2.12 Audio amplifier

The audio signal is routed from the center of the volume control to pin 8 of I416A. The signal is amplified approximately 40dB and capacitvely coupled through C472 to auto-transformer T402. The voltage and impedance are stepped up to provide a minimum of 100mw of audio power into a 500 ohm load such as headphones or an audio mixer. The output is fed through R516 to pin 9 on the rear panel connector. A "Mic Intercom" signal is also fed to I416A and passed through T402 to the headphone or to a 500 ohm load.

4.3.3 TRANSMITTER

Refer to the Transmitter schematic(s), Figure 6-11 & 6-13.

4.3.3.1 RF amplifier

RF is fed from the "transmit drive logic" to the pre-driver amplifier Q802 through a short length of miniature 50 ohm coaxial cable. The drive level is approximately 100mw. During receive mode, this driver is attenuated as PTT goes high, turning "on" Q801, shorting the drive to ground and reverse biasing Pin Diode CR804 to "open" the input to Q802. During the transmit mode, base current is supplied through R802 and CR804 to operate Q802 in Class A. Transformer T801 is broadband tuned and steps the collector impedance down to the input impedance of the driver.

4.3.3.2 Driver

RF drive is fed to driver Q803 through C811 and C844. Q803 is operated as Class C and the collector supply voltage is fully modulated. The collector is broadband tuned and coupled to the final by T802.

4.3.3.3 Final

Capacitors C816, C837, C817 and C818 form the input matching network for the final power amplifier Q804. The final is operated Class C and its collector is fully modulated. The low collector output impedance is stepped up to 50 ohms by transformer T803.

4.3.3.4 Low pass filter

A three section elliptic function low pass filter is placed between the final and the antenna to attenuate all harmonics which may be generated in the transmitter. During the receive mode, T/R diode CR803 is forward biased to feed the desired signal from the antenna through the low pass filter to the receiver RF amplifier.

4.3.4 MODULATOR

Refer to the COMM/NAV Receiver schematic(s), Figure 6-7 ,9 ,15 & 17.

4.3.4.1 Microphone input circuit

The microphone is connected to pin 2 on the rear panel connector. Mic bias is supplied by R500 and R501. The audio signal passes through C467 to the "Mic Gain" control, R505.

4.3.4.2 Mic pre-amp

The audio from R505 is fed through R506, C464 and R503 to the input of the mic pre-amp, I419A.

4.3.4.3 Compressor

The feedback from the modulator is applied to pin 3 of I419B. The voltage set by R594 pin 2 of I419B supplies the reference level. The voltage determined by R580 and R581 supplies the reference level to pin 5 of I419A. The output of I419B pin 1 biases CR423 turning on Q425. The output on the drain of Q425 thereby reduces the input of I419A. Q446 is used to turn on the modulator during transmit. The output of I419A is an AC signal which is coupled by C474 and R522 to pin 7 I416B.

4.3.4.4 Modulation amplifier

The output of the pre-amp samples a small amount of the mic audio from the output of I416B and then feeds it to the receiver audio amplifier for sidetone. The output is capacitively coupled to transformer T403.

4.3.4.5 Modulator

Transformer T403 supplies the audio drive necessary to cause the emitter of the modulator transistor (Refer to Figure 6-12), Q313, (Q312 14V version), to swing from 1 to 24 volts (0 to 12 volts in the 14V version). The collector of Q313 is connected to +27.5VDC (emitter of Q312 is connected to 13.75VDC in the 14V version) and a negative feedback is applied to audio amplifier I419B to provide compression. The emitter of Q313 (collector of Q312 in the 14V version) is also applied to the final RF amplifiers Q803and Q804 as modulated 12 volts (6 volts for the 14V version). Posistor RT1100 provides temperature protection for modulator transistor Q313 (Q312 in the 14V version) by pulling down the transmitter output power. The posistor has a positive temperature co-efficient, so that when temperature goes high it pulls down the base drive of Q311 and consequently pulls down the base drive of Q312. RT1100 performs the same function in the 14 volt version, but pulls the base of Q311 down.

4.3.5 STABILIZED MASTER OSCILLATOR

4.3.5.1 Voltage controlled oscillator (VCO)

Refer to Main Board and COMM/NAV Receiver schematics.

The voltage controlled oscillator is a modified Hartley oscillator operating at the desired frequency on the transmit mode and 11.4MHz below the desired receive frequency when providing the L.O. signal in the receive mode. Q211 is the active component of the COMM VCO, and varactor diode CR200E provides electronic tuning of the oscillating frequency.

As described in the microprocessor control section, the "UP" and "DN" signals are produced from the COMM LSI synthesizer which corresponds to the selected frequency of operation. The "UP" and "DN" signals represent the difference in frequency of reference and variable phase signals. In order to correct a frequency difference, the "UP" and "DN" signals are applied to a "current source charge pump" consisting of Q441, Q442 and Q440. The DC output signal is then fed to a low pass elliptic function filter L212, C256, C255 and C257. The synthesizer compensation network R222, R278 and C258 is a phase compensation network to provide loop stability. The output of the low pass filter is a DC voltage applied to matched tuning diode CR200E and provides tuning of the VCO to the desired frequency. When the frequency of the VCO is tuned, the output of the charge pump and consequently the DC tuning voltage stabilizes and no further change takes place. The DC tuning voltage is also applied to matched varactor diodes CR200A, CR200B, CR200C and CR200D for tuning their corresponding filters. The "UP" and "DN" signals are filtered by capacitor C497 and applied as a DC voltage to the base of Q216. A large enough DC voltage at the base of Q216 means that the transmitter is out of tune. This then causes Q216 to conduct and force Q215 and Q217 to turn "off". Consequently, Q213 and Q214 turn "off" and no drive is provided for the transmitter. Q213 and Q214 provide a buffer between the VCO and the transmitter driver. Q212 is the buffer between the VCO and the mixer. The L.O. signal is capacitively coupled to the mixer by capacitors C268 and C223.

4.3.5.2 Frequency selection

The microprocessor is programmed to cause the frequency selector switch to increase or decrease the "standby" frequency of 1MHz for clockwise or counter-clockwise detent rotation of the larger knob. Incrementing 135MHz will cause the frequency to roll over to 118MHz and similarly, decrementing 118MHz will roll over to 135MHz.

The smaller knob is used to increase or decrease the "Standby" frequency by either 25KHz or 50KHz, depending upon the position of the push-pull switch associated with this knob. If the knob is pushed in, the frequency will change to the next higher or lower 50KHz channel. If the switch is pulled out, the frequency will change by 25KHz.

4.3.6 NAVIGATION RECEIVER

Refer to COMM/NAV Receiver schematics, Figure 6-7, 9, 15 & 17.

The KX 165 incorporates a 200 channel navigation receiver providing the composite VOR/LOC signals for the VOR/LOC converter and indicators.

4.3.6.1 NAV voltage controlled oscillator (VCO)

The NAV VCO is a colpitts oscillator. Regeneration is provided by positive feedback from the emitter to the base by C361 and C362. Tuning is accomplished by varying the inductance of L308. The automatic tuning of the VCO is accomplished by matched varactor diode CR300E. A DC tuning voltage adjusts the capacitance of CR300E and consequently the resonant circuit tunes to the desired frequency. Resistors R388 and R387 bias the base of Q308, and capacitor C378 and C324 couples the output of the VCO to the mixer Q301.

4.3.6.2 Current source charge pump

As described in microprocessor theory of operation, the NAV LSI synthesizer receives the NAV VCO signal through C447 and compares it with a reference signal. The microprocessor provides a 19 bit serial code to the synthesizer and thus programs the internal operation of the synthesizer for proper comparison and generation of the "UP" and "DN" pulses which correspond to the difference in phase of the reference and the variable phase signals. The "UP" and "DN" pulses are applied to a current source charge pump which would source current to the elliptic function low pass filter consisting of L306, C352, C351 and C353. An RC compensation network consisting of R379 and C354 provides loop stability. The output of the low pass filter is a DC voltage which is applied to matched varactor diode CR300E for tuning of the VCO frequency. When the VCO is in a locked condition, the charge pump stops supplying current to the low pass filter and the DC tuning voltage to CR300E stabilizes. The DC tuning voltage is also applied to a double tuned input matched varactor filter and a double tuned interstage matched varactor filter for tuning purposes.

4.3.6.3 Antenna input circuit

The NAV RF signal received by the NAV antenna is applied to the double tuned input matched varactor filter through L309. Varactor diodes CR300A and CR300B are tuned automatically by the DC tuning voltage developed by the "UP" and "DN" signals which are initially adjusted by tuning inductors L300 and L301. The output of this double tuned filter is capactively coupled to gate 1 of Q300, the RF amplifier.

4.3.6.4 RF amplifier

The RF amplifier, Q300, receives the selected RF signal on gate 1 and amplifies it by approximately 20dB. The output of the RF amplifier is capacitively coupled to the high impedance double tuned interstage matched varactor filter through C314.

4.3.6.5 Double tuned interstage varactor filter

This double tuned filter is a high impedance filter which is tuned to desired signal frequency. Matched Varactor diodes CR300C and CR300D are tuned by the DC tuning voltage developed by the "UP" and "DN" pulses. The input double tuned filter along with interstage double tuned filter provides an image rejection of greater than 80dB. The output of the interstage double tuned filter is capacitively coupled to gate 1 of the mixer transistor, Q301, by capacitor C323.

4.3.6.6 Mixer

A lower side L.O. injection signal at 11.1MHz below the NAV channel frequency (fsmo = fc -11.1MHz) is applied at +7dBm to gate 2 of the mixer transistor Q301. The intermediate frequency (IF) is at 11.1MHz and is coupled through transformer T300 to the 8 pole monolithic crystal filter. The crystal input impedance is 5500 ohms with a ±17.3KHz bandwidth (6dB down). This filter provides the selectivity of the NAV receiver. Transformer T301 provides impedance matching and couples the output of the crystal filter to the first IF amplifier.

4.3.6.7 1st IF amplifier

The first IF amplifier, I300, receives the IF signal through T301. The IF signal is amplified by and coupled through transformer T302 to the 2nd IF amplifier.

4.3.6.8 2nd IF amplifier

The 2nd IF amplifier, I301, receives the IF signal through T302. The IF signal is amplified and then applied to the detector circuitry by impedance matching transformer T303.

4.3.6.9 Detector

Transistor Q303 is the amplitude modulated detector. It is biased near collector cut-off by transistor Q302, which is diode connected to provide stable bias and temperature compensation.

4.3.6.10 IF AGC circuit

AGC voltage is derived from the average value of the detector collector voltage. Operational amplifier I303B compares this voltage with the DC reference from R343 and R3015, amplifies it, filters out the audio variations, inverts it and feeds it back to the 1st and 2nd IF amplifiers. Thus, as the detector collector voltage decreases (with an increase in signal level) the AGC voltage increases which decreases the gain in the 2nd IF amplifier. Test point TP206 is provided for easy access to this voltage. Delayed AGC is applied to the first IF amplifier through R326.

4.3.6.11 RF AGC circuit

Delayed AGC is provided for the RF amplifier by I303A. The RF input level at which the RF AGC begins to take effect is set by resistor R355. The RF AGC voltage can be measured at TP207. As the IF AGC voltage exceeds the set reference, the RF AGC voltage decreases, thus decreasing the gain in the RF amplifier.

4.3.6.12 Elliptical high pass filter

The output of I303C is also fed to an elliptical high pass filter consisting of C345, C346, R364, C347, R365 and C348. This circuitry allows the NAV audio to be at least 20dB down at 150Hz.

4.3.6.13 Notch filter

Op. Amps I302B and I302C are designed to appear as an inductance. C337 is one-half the resonant circuit which is capped. Resistor R347 determines the inductance of the circuitry which permits the setting of the notch frequency.

4.3.7 VOR/LOC CONVERTER DETAILED CIRCUIT THEORY OF OPERATION

Refer to VOR Converter schematic, Figure 6-34 & 36.

4.3.7.1 VOR operation

The KX 165 VOR/LOC has only one input to I600C, the .5VRMS ARINC input signal for VOR and .35VRMS for LOC.

The VOR/LOC composite from the navigation receiver is capactively coupled through C603 and C602 to the input buffer, I600C. I600C is a voltage follower which provides a low impedance for the remainder of the circuit. Resistor R601 sets the course width of the input signal.

The signal is then applied to I600B. I600B is a 9960 bandpass filter that removes the 30Hz and increases the sensitvity of noisy signals. The output of I600B is coupled through C636 to the FM demodulator, I607B. The output is then applied to a cycle counter, R609, C606 and CR600. The cycle counter rectifies one-half of the 9960Hz Signal. From there it is applied to a low pass filter, I600A, that has a gain of 30dB. The output of I600A is coupled to the resolver through C633.

The output of I600C is also fed to I602C. I602C removes voice modulation from the received signal. The signal is applied to the variable 30Hz filter, I601B. I601B is used to track the 9960Hz filter with temperature and remove any harmonics that may be on the line.

The external 30Hz resolver couples a signal from the rotor to the stators by a transformer action. The stators by physical placement will have signals that are phase shifted by 90 degrees from each other, the amplitudes of which are dependent on the mechanical position of the resolver rotor. By varying the resolver rotor position, the amount of coupling between the rotor winding and both stator windings are varied. When one stator winding is at its maximum coupling, the other stator will be at its minimum coupling. The signals from the two stator windings are then applied to the constant amplitude phase shifter network, R649, R653 and C624. In this network, one signal is shifted 45° leading while the other is shifted 45° lagging. The vector addition of these signals results in a constant amplitude signal with a phase dependent on the rotor position. The adjustment of R649 will balance the phase shift of the two signals. The output of this network will ideally be shifted 45° from the input. However, driving into other than an infinite impedance may affect this phase shift.

The signal is then fed to I601A which is a 30Hz bandpass filter. The output at pin 1 of I601A is fed directly into I606D which is a squaring amplifier. Since the amp is operating essentially open loop (with no feedback), the output will switch from 7 volts to ground as the input crosses the reference voltage level.

The signal from I606D is then fed to I604C. The output of I604C pin 9 then chops the variable 30Hz. The resultant is a partial sine wave with a 0 volt average level. The signal is chopped between the 90° and 270° which results in a centered needle. Then any phase error will show up as a + or - DC level. The signal then passes through a two speed time constant, I604A. I604A's output then drives a deviation amplifier I612A.

The outputs of I601A and I601B are fed to the flag circuit through the peak detector devices CR609, CR610, CR611 and CR612. The signal is then fed into I601D.

I601B also outputs a signal to I602B. I602B is a 90° phase shifter at 30Hz. The output is a 90° phase shift that detects a to-from change. This phase shift is fed into I606B which is a squaring amplifier.

The reference 30Hz signal from I600A is applied to a bandpass filter I611C and the output is squared by squaring amplifier I607D. The signal then proceeds to an "exclusive OR" gate consisting of I608A, I608C, I610B and I610C. The other input to the "exclusive OR" gate is a 180° control signal coming from u-P. When the VOR bearing is less than 90° and more than 270°, the u-P adds a 180° pulse to the reference phase and takes into account the 180° addition to the bearing when computing the VOR bearing. The accuracy of the u-P when computing the VOR bearing is improved by the addition of 180° to the reference phase signal. The output of the "exclusive OR" gate is applied to "RESET" input of the "Edge trigger set/reset" flip-flop consisting of I608B, I608D, I609C, I609D, I610A, I610D, I609A and I609B. The variable phase 30Hz signal is applied to the squaring amplifier I606B and whose output is fed to "SET" input of the "edge trigger S/R" flip-flop. The flip-flop has the rising edge trigger sensitivity and thus produces a pulse at "Q" output of the flip-flop which represents the difference in phase of reference and variable phase signals and is applied to the u-P as a "30Hz pulse width signal." The u-P is programmed to measure this phase angle and display the information in the "Standby/RAD" window of NAV display section.

The output of I601D is applied to comparator I606C where a pulse is generated when the VOR flag is in view. The output of I606C is applied to the u-P and only 3 bars (---) are displayed in a VOR flagged condition in "Standby/RAD" window of the display. The output of I606C is "high" in a normal condition and goes low when it is flagged.

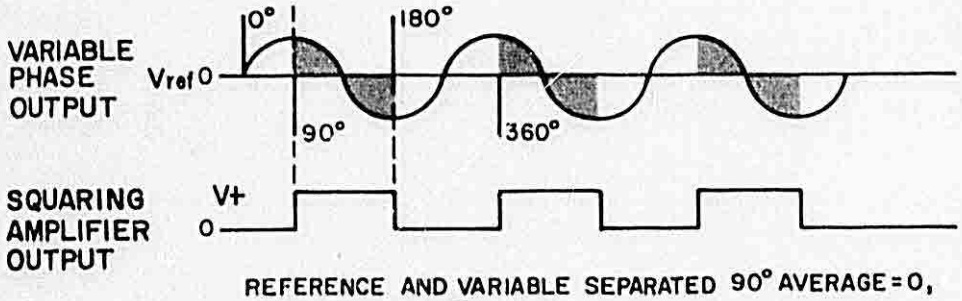

REFERENCE AND VARIABLE SEPARATED 90° AVERAGE = 0,
D-BAR OUTPUT = 0

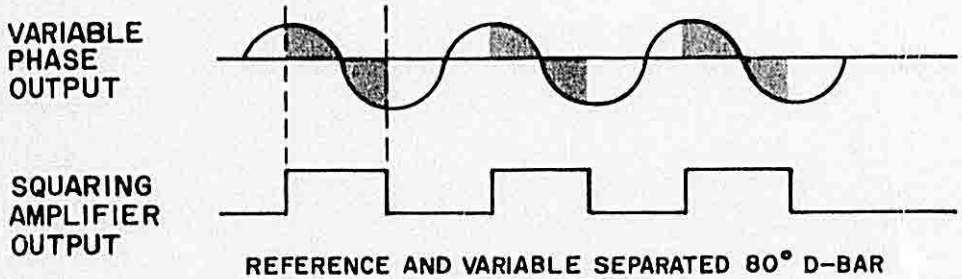

REFERENCE AND VARIABLE SEPARATED 80° D-BAR
OUTPUT – 5 DOTS DEFLECTION

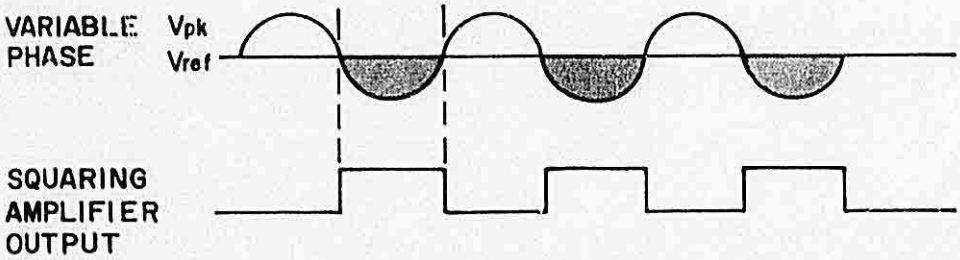

REFERENCE AND VARIABLE 180°, AVERAGE VOLTAGE = –318 Vpk
D-BAR OUTPUT – MAXIMUM

FIGURE 4-11 VOR PHASE COMPARATOR OUTPUT

4.3.7.2 Localizer operation

In the localizer mode, I604C is turned on continuously by the squaring amplifer I606D. This effectively shorts one end of R637 to the VREF line. DC bias from the VREF line through R637 and R636 is provided to I612A. I604A is switched on through CR618, the ILS HI line, to minimize the offset voltage of the amplifier.

Field effect transistor switch I604D is turned on in the localizer mode. The outputs of the two bandpass filters are halfwave rectified by CR605 and CR606. The connections of CR605, CR606, R641 and R639 are arranged so that the output of the 90Hz filter is subtracted from the output of the 150Hz filter. This AC voltage difference is integrated by I617A along with R702, R634 and C623. Gain of the amplifier is set by R702 while the combination of C623 and R634 set the response time of the VOR/LOC course deviation indicator in the localizer mode.

4.3.7.3 ILS energize

When an ILS frequency is selected the microprocessor outputs a high to Q430 and Q420. CR417 is used to provide a clamp for spikes that may appear on the collector of Q420.

4.3.8 GLIDESLOPE RECEIVER/CONVERTER DETAILED CIRCUIT THEORY OF OPERATION (OPTIONAL BOARD)

Refer to Glideslope Receiver schematic, Figure 6-30 & 32.

4.3.8.1 General

The stabilized master oscillator (SMO) provides a stable source of injection signal for the active mixer of receiver. It provides all the various frequencies necessary as the receiver is channeled through 40 different channels. A 12.8MHz reference signal from the digital board is fed to the glideslopes synthesizer to be compared with the glideslope VCO signal.

4.3.8.2 Voltage controlled oscillator (VCO)

Q912 is the active device used in this colpitts oscillator. C949 and C950 are used to provide feedback between the emitter and the base of Q912. L908 provides the inductive reactance necessary for the parallel resonant circuit to resonate while C945, C946 and CR901 provide the capacitive reactance. CR901 is a voltage variable capacitance diode and is reversed biased. As the DC voltage across diode CR901 is varied, its capacitance changes. This varying capacitance changes the frequency of the series resonant circuit which causes a change in frequency of the VCO. R972 and R973 provide the biasing of Q912. R1000, R1001, C951 C1011, and C952 provide a filtering or decoupling function from the supply voltage to insure a clean DC level. Table 4-2 shows the frequency of glideslope channel and corresponding VCO frequency.

4.3.8.3 Receiver buffer amplifier

Q913 provides the amplification of the VCO signal. C953 is used to impedance match the buffer amplifier to the mixer as well as to couple the injection signal.

4.3.8.4 Glideslope LSI frequency synthesizer

The frequency synthesizer controls and stabilizes the frequency of VCO output signal. A 19 bit binary instruction code from microprocessor is fed to the synthesizer in serial mode. This code sets the divide ratio of all counters in the synthesizer. A 12.8MHz reference signal is externally fed to the synthesizer. The synthesizer divides the 12.8MHz signal by 1536 and produces an 8.333KHz signal called the reference phase. The VCO signal has a frequency range of 164.5916MHz to 167.5166MHz and is divided by a divide ratio of 19750 to 20102 in the synthesizer to provide another 8.333KHz signal called variable phase. The phase comparator in the synthesizer and two signals called "Up" and "Down" (DN) are produced. The "Up" and "DN" signals which are proportional to the phase difference of the variable and the reference phase signals are fed to a current source charge pump Q911. The output of the charge pump is fed to the tuning diode CR901 of the VCO through a one section elliptic low pass filter which adjusts the frequency of the VCO until there is no phase difference between the variable and the reference phase signals.

The 12.8MHz external reference signal which is applied to pin 15 of I904 is also divided by the synthesizer to a 520.833Hz signal. This signal is used to frequency modulate the output of the VCO with a $\pm$3KHz deviation, which eliminates the possibility of zero beat problems in the receiver. The VCO signal is applied to pin 11 of I904 as feed back for the synthesizer loop.

4.3.8.5 Low pass filter

The output of the current source charge pump is fed to a one section elliptic low pass filter C941, C943, and L907. R993 and C942 provide phase compensation and an input path for the 520Hz signal used to FM the VCO.

4.3.8.6 Receiver

4.3.8.6.1 Tuned FET RF amplifier

Q901 is the active device used as the first stage of the RF amplifier. Q901 is a dual gate, N channel, enhancement mode, field effect transistor. Q902 is the same type of device and is used in the second RF amplifier immediately following. Since these are enhancement mode devices, their gates must be biased positive for proper operation. Both transistors are AGC'd on gate 2. The AGC on both transistors provide a 50dB range of attenuation. L918 matches the impedance to the input of the 1st RF AMP and C901 provides DC blocking while coupling the AC signal. L901 and Q901's internal capacitance, L902 and C904 and L903 and C911 are all tuned to resonate at approximately 332MHz. These tuned circuits provide the necessary preselection for the receiver. Q901 has about 10dB of gain and Q902 has approximately the same amount of gain providing a total of 20dB of gain before reaching the mixer.

4.3.8.6.2 Active mixer

C913 couples the input signal from the drain of the second RF amplifier to gate 1 of Q903. Q903 is a dual gate, N channel, enhancement mode insulated-gate field effect transistor. The signal from the buffer amplifier in the SMO is coupled into gate 2. The difference in frequency is taken from the drain and coupled into the next stage which is the IF filter. The IF is at 33.3KHz.

4.3.8.6.3 First IF amplifier (1)

The intermediate frequency (IF) is 33.3KHz. Q917 is the active bipolar device and provides approximately 20dB of gain. The signal is supplied to the elliptic IF filter through R1003.

4.3.8.6.4 Elliptic IF filter

This Elliptic IF Filter is a three section low pass filter with three tuned circuits. L904, L905 and L906 must be tuned to provide three distinct notches in the frequency response. L904 is tuned for a notch at 162KHz. L905 is tuned for notch at 83.6KHz. L906 is tuned for notch at 97.7KHz. The filter has a 6dB point at 62.5KHz. The 60dB point is 79.5KHz. The ultimate response of the filter is better than 70dB. Figure 4-12 shows the frequency response of the IF filter.

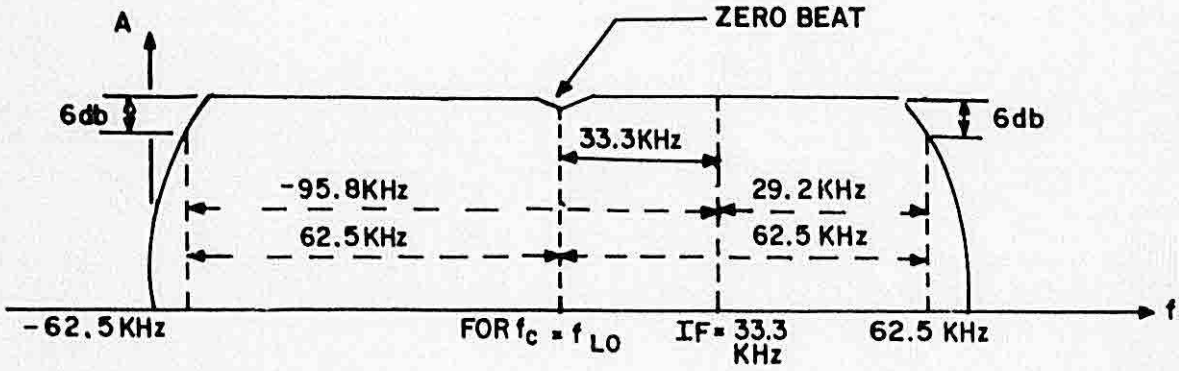

FIGURE 4-12 FREQUENCY RESPONSE OF IF FILTER

Figure 4-12 shows that the IF filter appears as a bandpass filter to the receiver with a bandwidth of ±62.5KHz but that the IF is centered at 33.3KHz to provide image rejection. Therefore, the IF filter appears as a "+29.2KHz and -95.8KHz" bandpass filter to the IF signal. The small amount of frequency modulation of VCO reduces the zero beat to a small value.

4.3.8.6.5 Intermediate frequency amplifier (2)

The intermediate frequency (IF) is 33.3KHz. Q904 is the active bipolar device.

4.3.8.6.6 Intermediate frequency amplifier (3)

C929 couples the signal from the second IF amplifier into I901, a monolothic IF amplifier.

4.3.8.6.7 Intermediate frequency amplifier (4)

Q905 is the final IF amplifier. R924 and R925 are the base bias resistors for Q905. C935 couples the output of the fourth IF amplifier to the detector.

4.3.8.6.8 Detector

Q907 is the active component of this circuit. C936 and R930 determine the frequency response of the detector. Q906 biases the base of Q907 and provides temperature compensation.

4.3.8.6.9 Intermediate frequency AGC amplifier

The detected 90Hz and 150Hz composite is directly coupled through R932 to the AGC operational amplifier I902D. The output of IF AGC amplifier is applied to I901 for IF AGC action.

4.3.8.6.10 RF AGC amplifier

The output of the IF AGC amplifier is directly coupled to I902C which is the active device of RF AGC amplifier. R980 is the variable resistor which is used to set the RF AGC attack point. As signal level increases, the voltage at Pin 8 increases to keep the potential between Pins 9 and 10 at 0 volts, thus providing AGC action on gate 2 of both RF amplifiers.

4.3.8.7 Converter

4.3.8.7.1 Course width amplifier

I902B is the operational amplifier used in this circuit. R940 and R941 determine the gain that R941 may be used to adjust for correct course width indication. Its gain is less than unity.

4.3.8.7.2 90Hz active filter

The output from the course width amplifier is applied to R943. R943 is the centering potentiometer which how much of the detected signal goes to the 90Hz filter or 150Hz filter. The bandwidth of the 90Hz filter is determined by R946, C965a and C965b. The gain of the filter is determined by R946 and R942. One fourth of a quad operational amplifier integrated circuit is used (I903A) for this function.

4.3.8.7.3 150Hz active filter

The 150Hz filter is the same type of filter as the 90Hz filter except component values have been changed in some instances to provide the 150Hz signal to pass. Gain of this filter is determined by R954 and R944. The bandwidth is specified by R954, C965c and C965d. Another one-fourth of the quad operational amplifier IC is used (I903D).

4.3.8.7.4 Peak detector (90Hz) (1)

CR904 rectifies the 90Hz signal and passes the positive portion of the sine wave, charging C969 in the positive direction. This is a DC voltage with some ripple still unfiltered by R949 and C969. The time constant of R949 and C969 is chosen to dampen noise.

4.3.8.7.5 Peak detector (150Hz) (1)

CR907 rectifies the 150Hz signal and passes the negative portion of the sine wave, charging C969 in the negative direction. Low pass filtering is done by R957 and C969. The time constant of R957 and C969 is chosen to provide damping to noise, thus eliminating erratic movement of the indicator needle.

4.3.8.7.6 Deviation bar driver

Operational amplifier I903B takes the difference of the 90Hz and 150Hz detected signals and amplifies it. It is used as the low pass filter and driver for the deviation indicator. The amplifier gain is set by R950 and R951. C971 and R951 are chosen to provide damping of noise. I903B provides a voltage source, thereby allowing the addition of more than one indicator load without changing the indicators position.

4.3.8.7.7 Peak detector (90Hz) (2)

This is the second peak detector connected to the 90Hz active filter. This detector is for the flag indicator. CR903 provides the rectification while CR902 is used to compensate for variations in the voltage across CR903 during temperature changes.

4.3.8.7.8 Peak detector (150Hz) (2)

This is the second peak detector connected to the 150Hz active filter. This detector is also for flag indicator. CR909 provides the rectification while CR908 provides the temperature compensation.

4.3.8.7.9 Flag driver

Operational amplifier I903C is used for the flag indicator driver. The driver provides a voltage source so that several flag loads may be used simultaneously without adversely affecting the indicators. A summing of the detected 90Hz and 150Hz generated voltages occurs at the input of I903C. C972 and R959 are chosen to provide a time constant which provides damping for noise, thus eliminating any erratic motion of the indicators.

4.3.8.7.10 Converter reference voltage amplifier

I902A provides a voltage source for the converter. The output voltage is determined by the divider action of R936, R937 and R938.

LOCALIZER FREQUENCY (MHz)	GLIDESLOPE FREQUENCY (MHz)	GLIDESLOPE VCO FREQUENCY (MHz)
108.10	334.70	167.33335
108.15	334.55	167.25835
108.30	334.10	167.03335
108.35	333.95	166.95835
108.50	329.90	164.93335
108.55	329.75	164.85835
108.70	330.50	165.23335
108.75	330.35	165.15835
108.90	329.30	164.63335
108.95	329.15	164.55835
109.10	331.40	165.68335
109.15	331.25	165.60835
109.30	332.00	165.98335
109.35	331.85	165.90835
109.50	332.60	166.28335
109.55	332.45	166.20835
109.70	333.20	166.58335
109.75	333.05	166.50835
109.90	333.80	166.88335
109.95	333.65	166.80835
110.10	334.40	167.18335
110.15	334.25	167.10835
110.30	335.00	167.48335
110.35	334.85	167.40835
110.50	329.60	164.78335
110.55	329.45	164.70835
110.70	330.20	165.08335
110.75	330.05	165.00835
110.90	330.80	165.38335
110.95	330.65	165.30835
111.10	331.70	165.83335
111.15	331.55	165.75835

TABLE 4-2 FREQUENCY CHART
(Sheet 1 of 2)

LOCALIZER FREQUENCY (MHz)	GLIDESLOPE FREQUENCY (MHz)	GLIDESLOPE VCO FREQUENCY (MHz)
111.30	332.30	166.13335
111.35	332.15	166.05835
111.50	332.90	166.43335
111.55	332.75	166.35835
111.70	333.50	166.73335
111.75	333.35	166.65835
111.90	331.10	165.53335
111.95	330.95	165.45835

NOTE: The local oscillator signal is injected at $\frac{fc - 33.3KHz}{2}$ which is a low side injection. The intermediate frequency (IF) is at 33.3KHz.

TABLE 4-2 FREQUENCY CHART
(Sheet 2 of 2)

4.3.9 ISOLATION AND AUDIO AMPLIFIER

The inputs are designed for a 40 mW audio level and an impedance of 500 ohms. The output of the summing amplifier is applied to the intercom input on the main board in the KX 155/165. The main board mixes the intercom input and comm sidetone with the comm audio.
The comm audio output is then applied to the comm audio input of the audio amplifier board. The audio board amplifies the comm audio input to drive a 4 ohm speaker. The audio amplifier is capable of supplying 4 watts of power, undistorted, when used with a 14V supply and 8 watts of power, undistorted when used with a 28V supply. A push to talk, PTT, input to the audio amplifier disables the speaker output during transmit.

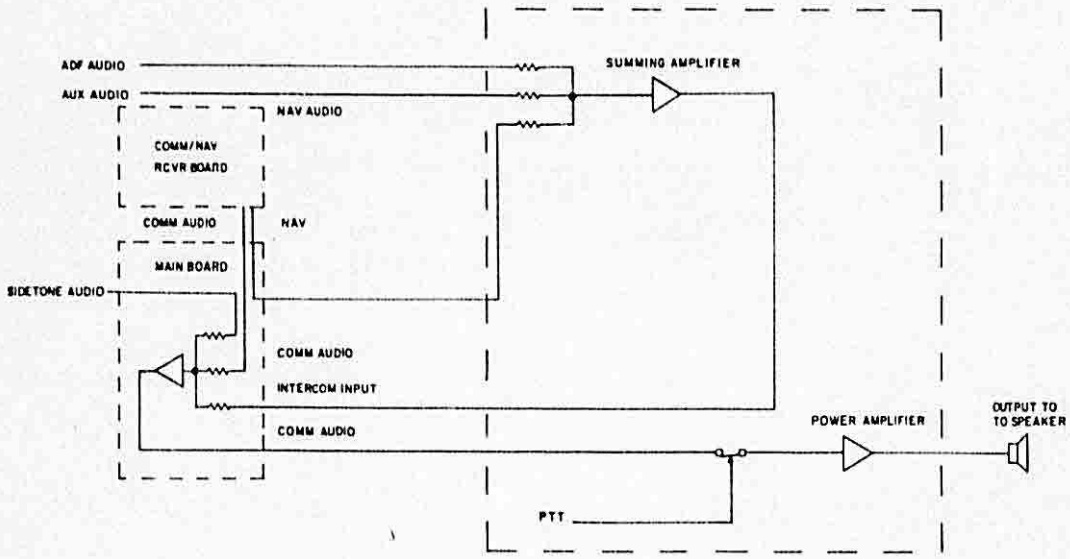

FIGURE 4-13 KX 155/165 AUDIO BOARD BLOCK DIAGRAM

4.3.10 POWER SUPPLY

Refer to Main Board schematic, Figure 6-25 & 27.

4.3.10.1 +27.5 Volt DC supply

The 27.5 volt aircraft bus is fed through the power switch on the volume control shaft, then through a jumper on the rear panel connector to a fuse and hash filter C1100, C1101, C1102, C1103, C1104, C1105 and C1106. This provides a clean source of power for the modulator, 12 volt regulator and the switching regulator.

NOTE

The difference between 27.5 and 13.75 volt supply is the input voltages and hash filters. The hash filters in the 13.5 volt are the same components previously mentioned except the 14V hash filter uses 1000uf caps @ 25V and the 28V hash filter uses 470 uf caps @ 50V.

The NAV and COMM audio amplifier operates off the hash filter in the 14 volt version.

4.3.10.2 Switching regulator

The basic concept of the switching regulator is to turn "ON" and "OFF" the switching transistor Q402 so that power can be transferred from the primary of T400 to the secondary and the associated rectifiers.

The +27.5 volt DC (13.5 volt DC) is fed to a 5 volt voltage regulator, I400, through the hash filter. The regulated 5 volt output of I400 is applied to the non-inverting terminal of error amplifier (comparator) I401A as reference DC level. A 10 volt variable (the DC level from the output of the switching transformer) is divided in half by voltage divider network R401 and R402. Diode CR410 limits the "+5 volt DC" output voltage (at the junction of CR413 and C429) to 5.7 volt DC when it is forward biased and therefore provides protection for the units using a "+5 volt DC" supply. Comparator I401A compares the DC reference and DC variable voltages. Its output goes low for voltages at the inverting terminal that are greater than the voltage at non-inverting terminal. The output of I401A open circuits when the voltage at the inverting terminal is less than the voltage at the non-inverting terminal.

I401C is connected as a 15KHz oscillator producing a ramp waveform at the inverting terminal of the pulse width modulator, I401B. When the output of I401A is open, the voltage at the non-inverting terminal of I401B is set to 2.5VDC by voltage divider resistors R413 and R414. The output pulses of I401C are then applied to driver (emitter follower) Q401. When Q401 conducts, 402 conducts pulling the current through primary winding of switching regulator T400. When Q401 is turned off, Q402 goes into an off state and the current flow through the primary stops. This change of current in T400 produces a changing flux which transfers power to the secondary of T400 and associated rectifiers. The amount of delivered output power depends on the pulse width of the current pulses in the primary of T400.

Diode CR412 and capacitor C428 rectify and filter the output voltage of T400 to provide a $\pm$ 10 volt DC level. This $\pm$ 10 volt DC level is sensed by error amplifier I401A where its output adjusts the pulse width of the pulse width modulator.

I401D provides current limit protection for switching transistor Q402. When the current in the emitter of Q402 increases, the comparator I401D senses the change in voltage at the emitter of Q402 and adjusts the DC level at the non-inverting terminal of I401B so that the pulse width of current pulses passing through Q402 to decrease.

The "-26 volt DC" is produced by rectifier CR414 and filter C430 and supplied to the non-volatile memory. Rectifier diode CR412 and filter C428 and C491 produce a "+10 volt DC" voltage. Transistors Q404, Q405 and I420 act as a 9V regulator for the "+9 volt DC" supply.

Rectifier diode CR411 and filter capacitor C427 provides the "+192 volt DC" supply for the gas discharge display.

CHAPTER

05

SECTION V
MAINTENANCE

5.1 GENERAL INFORMATION

This section contains information on tests, alignment, inspection, cleaning, repair and troubleshooting procedures for the KX 155/165.

Information concerning semiconductor and integrated circuit maintenance along with specific operating characteristics can be found in Appendix A of this manual.

Basic digital logic theory can also be found in Appendix A. This information is provided to aid the technician in developing a working knowledge of commonly used devices and should not be interpreted as the means at which the designed unit operates.

5.1.1 STANDARD TEST SIGNAL DESCRIPTION

A. Standard VOR Test Signal

An RF carrier, amplitude modulated simultaneously (a) 30 ± 1% by a 9960Hz subcarrier, which is in turn, frequency modulated at a deviation ratio of 16 by a 30Hz ± 1% "reference phase signal" and (b) 30 ± 1% by a 30Hz ± 1% "variable phase signal" which can be varied in phase with respect to the reference phase signal.

B. Standard Audio Test Signal

An RF carrier amplitude modulated 30% at 1000Hz.

C. Standard Localizer Test Signal

An RF carrier modulated simultaneously with 90Hz ± .3% and 150Hz ± .3% signals so that the sum of their separate modulation percentages equals 40 ± 2%.

D. Standard Localizer Centering Signal

A standard localizer test signal in which the difference in depth of modulation is less than .002 (.1dB).

E. Standard Localizer Deviation Signal

A standard localizer test signal in which the difference in depth of modulation of the 90Hz and 150Hz signal is .093 ± .002 (4 ± .1dB).

F. Standard Glideslope Test Signal

A 700μV (Hard) RF carrier amplitude modulated simultaneously with 90Hz and 150Hz of each level so that when each signal is applied independently, the carrier is modulated 40 ± 2%.

G. Standard Glideslope Centering Signal

A standard glideslope test signal in which the difference in depth of modulation of the 90Hz and 150Hz signals is less than .002.

H. Standard Glideslope Deviation Signal

A standard glideslope test signal in which the difference in depth of modulation of the 90Hz and 150Hz signals is 0.091 ± .002 (2 ± .1dB).

NOTES:

1. All RF voltages are "HARD" Microvolts. "Hard" microvolts indicates use of a 6dB pad between the signal generator and the receiver. (Example: A receiver with 6dB S + N/N at 2μV <u>hard</u>, must have 1μV of sensitivity.)

2. A standard modulator test signal is a .4VRMS, 1KHz tone, open circuit with the network shown in Figure 5-5.

3. Maximum load driving capabilities are as follow:

VOR/LOC D-Bar	5-1000 ohm loads
G/S D-Bar	8-1000 ohm loads
Audio Output	500 ohm load
To-From	3-200 ohm loads
G/S Flag	9-1000 ohm loads
VOR/LOC Flag	3-1000 ohm loads

4. Audio amplifier speaker output 4 ohms.

5. $\geq$ means greater than or equal
   $\leq$ means less than or equal

5.2 TEST AND ALIGNMENT

5.2.1 TEST EQUIPMENT

The following test equipment or equivalent is required to properly align and test the KX 155/165. All test equipment must be calibrated before attempting alignment.

A. Power Supply:

Sorenson SRL 40-6 (27.5V @ 8 amps) or equivalent

B. RF Signal Generator:

Boonton 211 or equivalent

C. Audio Signal Generator:

HP 200CD Wide Range Oscillator or equivalent

D. Digital Multimeter:

Fluke 8000A or equivalent

E. RF Wattmeter:

Bird Model 611 or equivalent

F. Frequency Counter:

HP 5245L With 5253B Hetrodyne Converter or equivalent

G. Audio Wattmeter with Load:

Eico Model 261 or equivalent

H. Oscilloscope:

Tektronix Model 465 or equivalent

I. Linear Detector:

See Figure 5-5, for details

J. VOR/ILS Audio Signal Generator:

TIC Model T-20A or equivalent

K. Glideslope RF Signal Generator:

Boonton 232A or Equivalent

L. KX 155/165 Test Harness, Shop Fabricated From Bench Test Harness Kit KPN 050-01920-0000 which contains:

Part Number	Description	Quantity
030-01107-0055	Terminal Conn 55T	2
030-00101-0002	Connector	3
030-01094-0059	Conn 15 Pos	1
030-01094-0060	Conn 18 Pos	2

M. Precision Track Selector:

Collins Model 479V-3 or equivalent (Consult Service Memo 105)

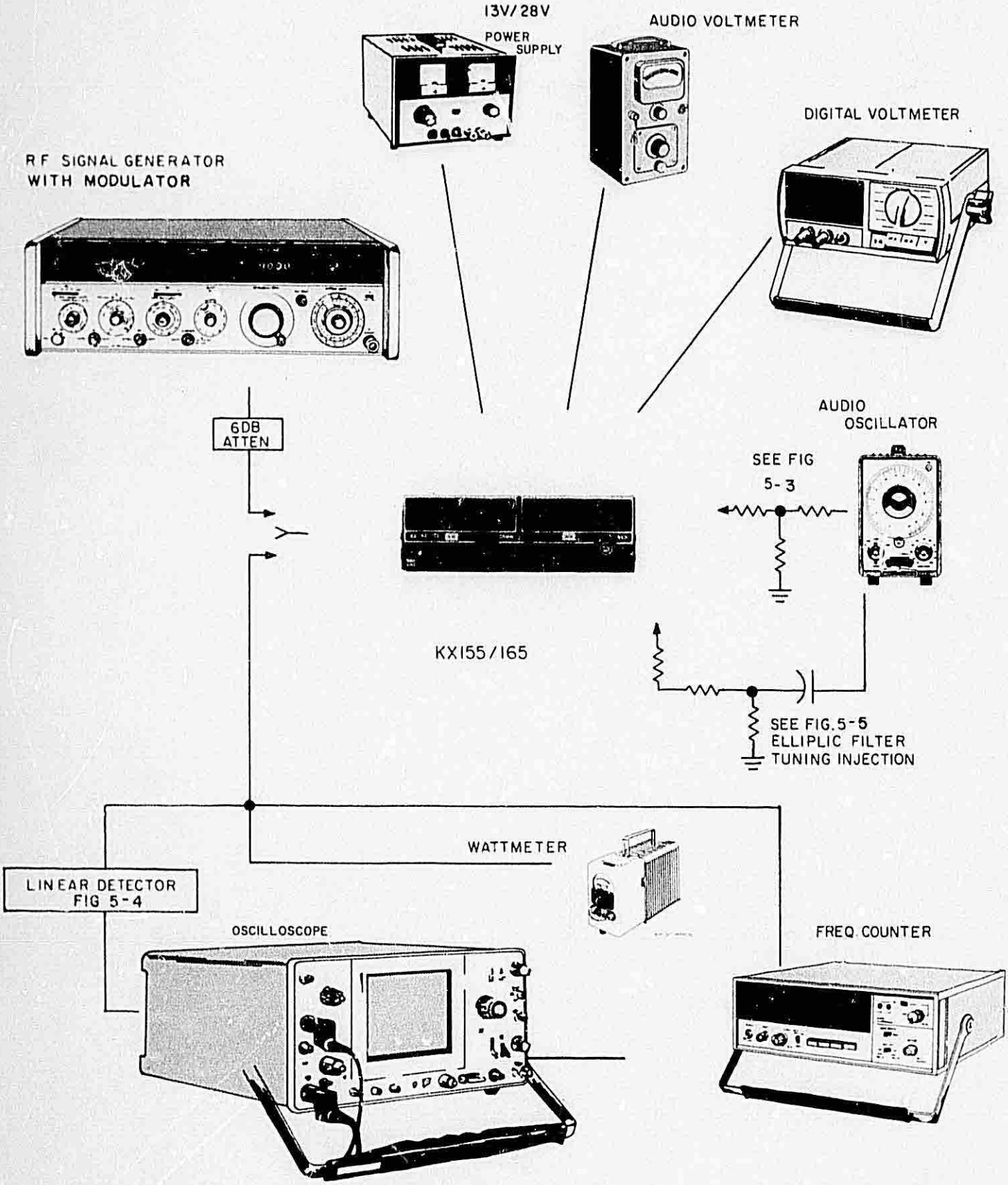

FIGURE 5-1 TYPICAL TEST EQUIPMENT SETUP

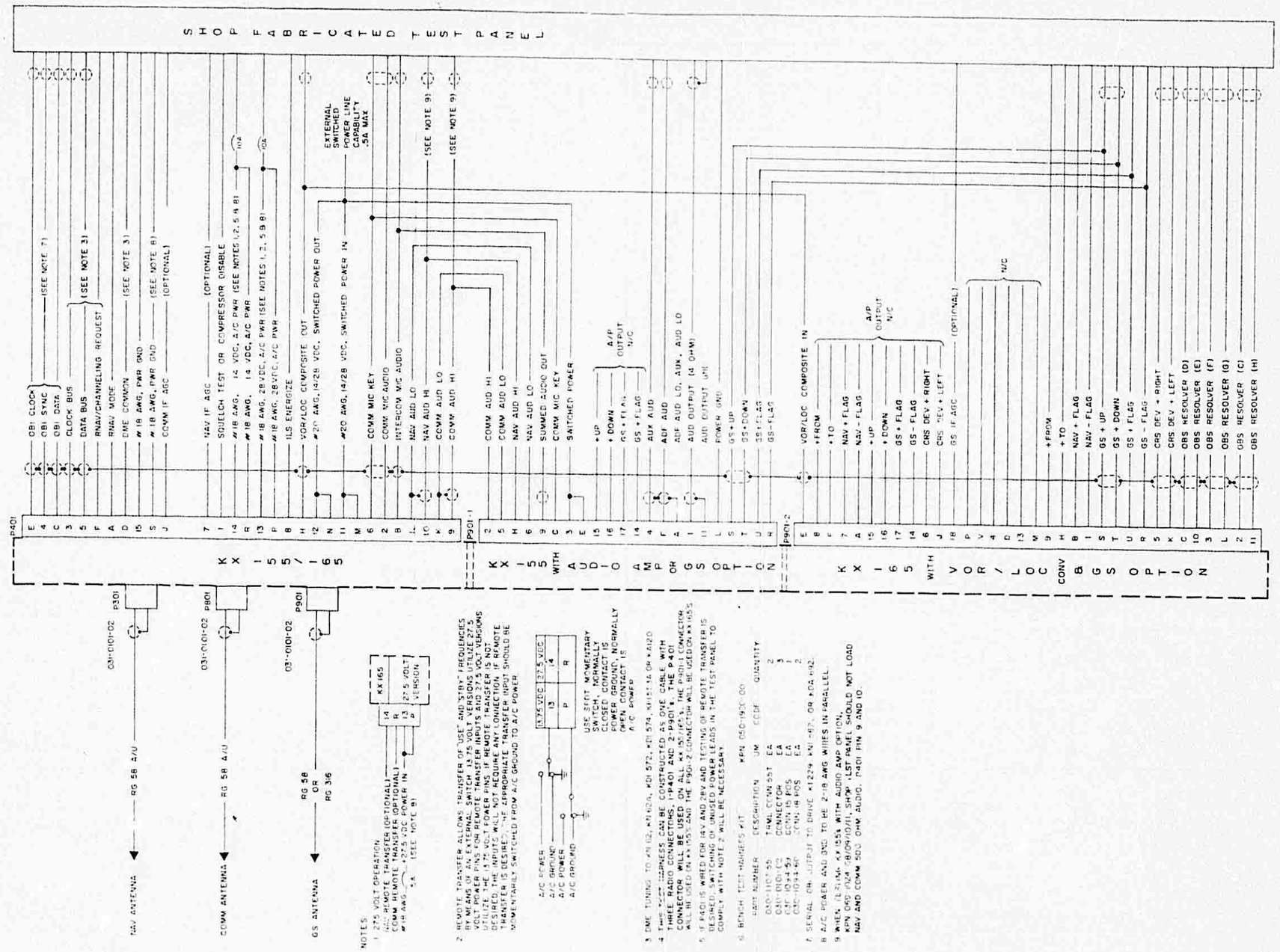

FIGURE 5-2 BENCH TEST HARNESS
(Dwg. No. 002-00544-0000, R-1)

ALSO SEE THIS PAGE AS UPPER/LOWER (NEXT)

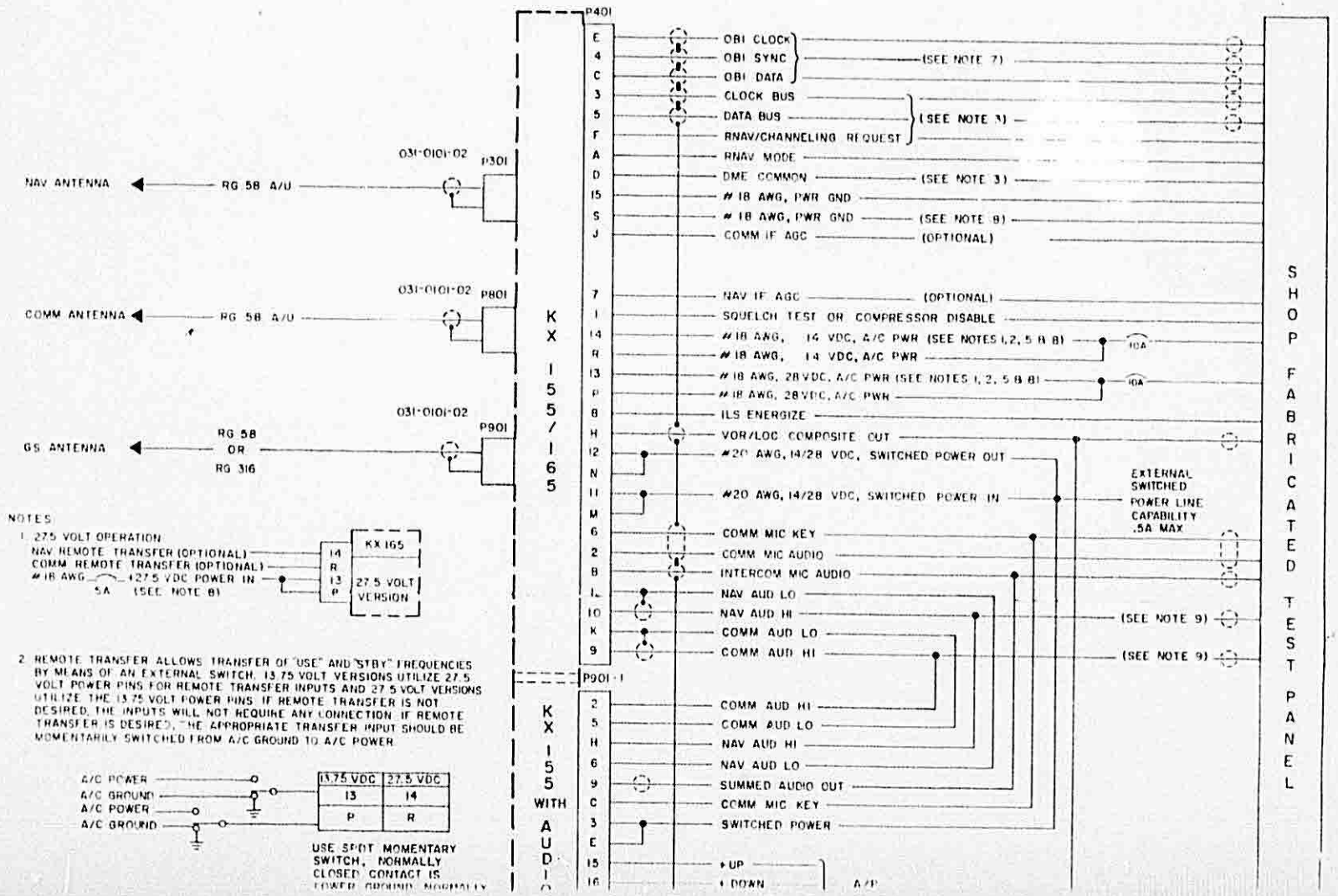

FIGURE 5-2 BENCH TEST HARNESS
(Dwg. No. 002-00544-0000, -R-1)

2. REMOTE TRANSFER ALLOWS TRANSFER OF "USE" AND "STBY" FREQUENCIES BY MEANS OF AN EXTERNAL SWITCH. 13.75 VOLT VERSIONS UTILIZE 27.5 VOLT POWER PINS FOR REMOTE TRANSFER INPUTS AND 27.5 VOLT VERSIONS UTILIZE THE 13.75 VOLT POWER PINS. IF REMOTE TRANSFER IS NOT DESIRED, THE INPUTS WILL NOT REQUIRE ANY CONNECTION. IF REMOTE TRANSFER IS DESIRED, THE APPROPRIATE TRANSFER INPUT SHOULD BE MOMENTARILY SWITCHED FROM A/C GROUND TO A/C POWER.

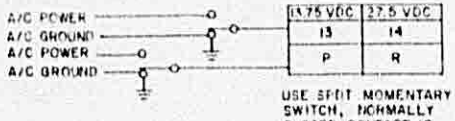

USE SPDT MOMENTARY SWITCH, NORMALLY CLOSED CONTACT IS POWER GROUND, NORMALLY OPEN CONTACT IS A/C POWER.

3. DME TUNING TO KN 62, KN 62A, KDI 572, KDI 574, KP 153A OR KA120

4. THIS TEST HARNESS CAN BE CONSTRUCTED AS ONE CABLE WITH THREE RADIO CONNECTORS, 1-P401 AND 2-P901's. THE P401 CONNECTOR WILL BE USED ON ALL KX 155/165's. THE P901-1 CONNECTOR WILL BE USED ON KX 155S AND THE P901-2 CONNECTOR WILL BE USED ON KX 165S.

5. IF P401 IS WIRED FOR 14V AND 28V AND TESTING OF REMOTE TRANSFER IS DESIRED, SWITCHING OF UNUSED POWER LEADS IN THE TEST PANEL TO COMPLY WITH NOTE 2 WILL BE NECESSARY.

6. BENCH TEST HARNESS KIT KPN 050-1920-00

PART NUMBER	DESCRIPTION	UM	CODE	QUANTITY
030-1107-55	TRML CONN 55T	EA		2
030-0101-02	CONNECTOR	EA		3
030-1094-59	CONN 15 POS	EA		1
030-1094-60	CONN 18 POS	EA		2

7. SERIAL DBI OUTPUT TO DRIVE KI229, KNI 662, OR KDA 692.

8. A/C POWER AND GND TO BE 2-18 AWG WIRES IN PARALLEL.

9. WHEN TESTING KX 155's WITH AUDIO AMP OPTION, KPN 050-1024-08/09/10/11, SHOP TEST PANEL SHOULD NOT LOAD NAV AND COMM 500 OHM AUDIO. P401 PIN 9 AND 10.

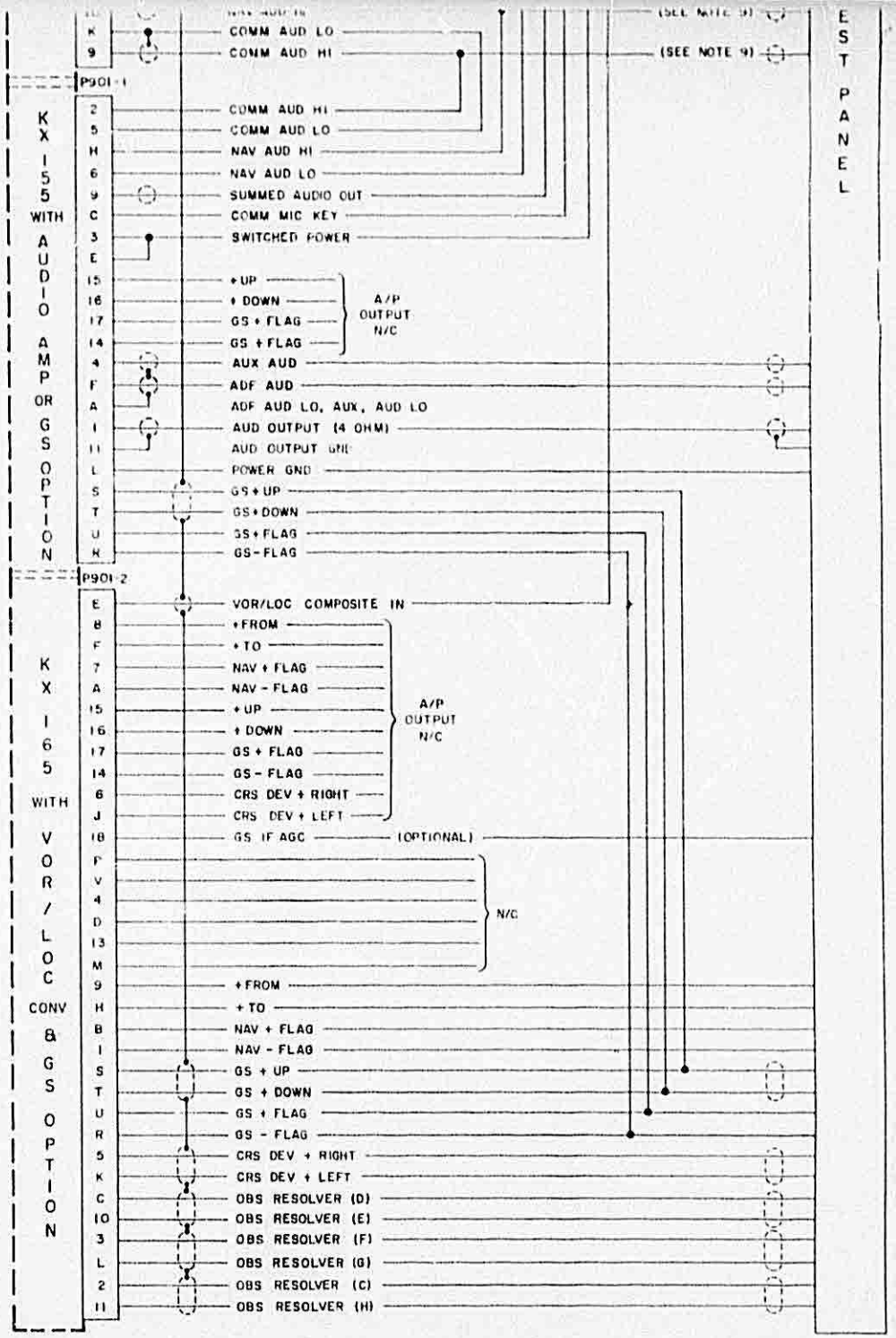

LOWER

page 5-5

5.2.2 ALIGNMENT PROCEDURE

5.2.2.1 Communications Receiver Alignment

A. Initial Control Settings

R261	Noise Squelch	Max CW
R249	Carrier Squelch	Max CW
R106	Volume Control	Max CCW (Off)
S105	Com. Frequency Control	135.97MHz

B. Frequency Adjust

1. Count the VCO frequency at TP205 on the receiver board with the NAV frequency selector (S104) at 117.950MHz.
2. Adjust C434 for a reading of 106.850MHz ± 200Hz. This adjustment must be within 60 seconds of turn on at normal room temperature (75°F ± 5°F) to insure temperature tracking within limits over the temperature range.

C. Voltage Regulator Test

1. Apply power and advance volume to turn on.
2. Check voltage at cathode of CR412 for 10.0V ± .50V.

C. VCO Adjust

1. Read voltage at TP201 and adjust T205 for 9.0V (at 135.975MHz).

D. RF-IF Alignment

1. Set the COMM frequency control to 126.500MHz.
2. Inject a 126.500MHz signal with no modulation into the COMM antenna connector and supply sufficient RF to obtain a .5V change at TP202 on the receiver board.
3. Tune T201, T202, T203 and T204 for maximum voltage at TP202.
4. Tie a 200 ohm resistor across L202 and tune L200 for maximum voltage at TP202. (Reduce RF as required to keep the voltage at TP202 under 5.0VDC.)
5. Move resistor to L200 and tune L202 for maximum voltage at TP202.
6. Move resistor to L206 and tune L203 for maximum voltage at TP202.
7. Move resistor to L203 and tune L206 for maximum voltage at TP202.
8. Remove resistor.

E. Noise Squelch Adjustments

1. Set the COMM frequency selector to 126.500MHz.
2. Apply a 126.500MHz, 2μV (hard) signal modulated 30% at 1KHz into the COMM antenna connector.
3. Slowly adjust R261 CCW until receiver just breaks squelch.

F. Carrier Squelch Adjustments

1. Apply a 126.500MHz, 12.5μV (hard) signal into the COMM antenna connector modulated 85% at 8KHz.
2. Slowly Adjust R249 until the squelch just breaks.
3. Recheck noise squelch adjustment. Carrier squelch adjustment may cause interaction.

G. Climax Filter Adjustment

1. Apply a 126.500MHz, 100μV (hard) signal modulated 30% at 5KHz.
2. Monitor COMM audio output with an audio wattmeter.
3. Adjust L209 for minimum output (null).

5.2.2.2 Navigation Receiver Alignment

A. Initial Control Settings

R340	NAV Comp. Level	Max CCW
R347	Ident Filter Adjust	Max CCW
R355	IF AGC Adjust	Max CW

B. VCO Adjust

1. Set frequency to 117.95MHz.
2. Read voltage at TP204 and adjust L308 for 7VDC.
3. Set frequency to 108.000MHz.
4. Verify that a minimum of 3VDC exists at TP204.

C. RF-IF Alignment

1. Set the NAV frequency control to 112.500MHz.
2. Apply a 112.500MHz signal with no modulation into the NAV antenna connector.
3. Supply sufficient RF to obtain approximately 4.5VDC at TP206 on the receiver board.
4. Tune T300, T301, T302 and T303 for maximum voltage at TP206.
5. Tie a 200 ohm resistor across L301.
6. Tune L300 for maximum voltage at TP206. (Reduce RF as required to keep the voltage at TP206 under 4.5V.)
7. Move resistor to L300.
8. Tune L301 for maximum voltage at TP206.
9. Move resistor to L304.
10. Tune L303 for maximum voltage at TP206.
11. Move resistor to L303.
12. Tune L304 for maximum voltage at TP206.
13. Remove resistor.

D. NAV AGC

1. With a 10μV input level, adjust R355 until RF AGC drops .5V at TP207.

E. NAV Composite Level

1. Apply a 111.30MHz, 100μV (hard) signal modulated with a standard localizer centering signal to the NAV antenna.
2. Monitor J401 Pin H with an audio wattmeter (VTVM function).
3. Adjust R340 for .35VRMS.
4. Apply a 112.00MHz, 1KμV (hard) signal modulated 30% at 1KHz to the NAV antenna.
5. Monitor J401 Pin 10 with an audio wattmeter (500 ohm).
6. Push the ident switch (S103) in.
7. Adjust R347 for a minimum audio output.

5.2.2.3 Transmit Tracking Alignment

A. Key the transmitter at 135.975MHz.

B. Adjust C820 for maximum power out.

C. Rotate thru the MHz channels on the Comm Frequency selector to make sure the output is relatively flat from 118.000MHz to 135MHz (NMT 4 Watt variation). Adjust C820 if necessary.

5.2.2.4 Transmitter Alignment

A. Adjust R300 (power output adjust) to obtain 10 Watts minimum across the band.

B. Set R594 (compressor adjust) CCW.

C. Set R505 (Mic gain) to midrange.

D. Set the volume control at midrange.

E. Input a standard microphone test signal into the mic input.

F. Locate the MHz frequency where the least percentage of modulation occurs.

G. Adjust R505 for 85% down mod.

H. Double the amplitude of the input signal.

I. Adjust R594 until 85% down mod is reached.

J. (14V version only) Again apply a standard microphone test signal and adjust R3021 (power cutback adjust) until the modulation is just below clipping.

K. Repeat steps A-J until interaction ceases.

L. Apply a standard microphone test signal and adjust R512 for 1.4VRMS at J401 Pin 9 (with transmitter keyed).

5.2.2.5 Display Intensity Adjustment

A. Cover the photocell with an opaque tape.

B. Adjust R438 for 100 ±us pulse width at the anodes of CR408.

C. Short across the photocell while checking the display for operation.

5.2.2.6 VOR/LOC Converter Alignment

A. Midrange - all pots.

B. Apply a standard VOR test signal.

C. Set the OBS and VOR generator to 90° FROM.

D. Adjust R662 for 0mV (0μA) deflection.

E. Check 90° "TO" error. Balance error between to and from.

F. Set the OBS and VOR generator to 0° FROM.

G. Check 0° "TO" error. Balance error between to and from.

H. Adjust R649 for 0mV (0μA) deflection.

I. Repeat Steps C-F until best centering is obtained.

J. Set a 10° difference between OBS and VOR generator.

K. Adjust R601 for 150μA ± 5μA deviation.

L. Set a 10° difference of the opposite polarity between the OBS and VOR generator.

M. Check for 150mV deflection ±10mV.

N. Pull the RAD switch out.

O. Monitor the non-manual VOR bearing

P. Set VOR generator to 0.6°.

Q. Adjust R701 until display just flickers between 0° and 1°.

R. Apply a standard localizer centering signal.

S. Set R640 for 0mv deflection.

T. Set the generator for 4dB (.093ddm) with 90Hz predominate.

U. Adjust R674 for 90mV deflection.

V. Repeat steps P-S until no further improvement is noted.

W. Set the generator for .093ddm with 150 predominate.

X. Check for 90mV ± 10mV.

5.2.2.7 Glideslope Receiver Alignment

A. Initial Settings

R980	RF AGC	CW
R941	Course Width	1/4CW
R943	LOC Centering	Midrange

B. VCO Adjustments

1. Set the NAV receiver 110.300MHz. (Glideslope frequency 335.000MHz.)
2. Adjust L908 for 4.0VDC at TP907.
3. Set NAV receiver 108.950MHz (329.15).
4. Verify >1.5V at TP907.

C. Elliptic Low Pass Filter Tuning Procedure

1. Connect a HP200CD wide range oscillator to TP906 through a network in Figure 5-6, with no RF input.
2. Connect a digital voltmeter to TP905.
3. Set the HP200CD for 162KHz when testing a -00 board or 170KHz when testing a -10 board.
4. Set the HP 200CD for 200m Vpp at TP906.
5. Adjust L904 for a minimum voltage at TP905. Increase signal level if necessary.
6. Set the HP200CD for 83.6KHz when testing a -00 board or 88.9KHz when testing a -10 board.
7. Repeat Step 4.
8. Adjust L905 for a minimum voltage at TP905.
9. Set the HP200CD for 97.7KHz.
10. Repeat Step 4.
11. Adjust L906 for minimum voltage at TP905.

D. RF Alignment

1. Channel the NAV Receiver to 109.300 MHz.
2. Apply a 332.00MHz signal with no modulation with sufficient level to produce a 4.5VDC at TP905.
3. Adjust L901, L902 and L903 for maximum voltage at TP905 (reducing RF level as required to keep TP905 under 4.5V).
4. Repeat Step 2 until no further improvement is noticed.

E. RF-AGC Adjustment

1. Apply a 332.000MHz, 25μV (hard) signal with 40% modulation by 90Hz and 40% modulation by 150Hz.
2. Adjust R980 until the voltage at TP903 just begins to ·np

F. Converter Alignment

1. Apply a 332.000MHz signal with 40% modulation by 90Hz and 40% modulation by 150Hz at 700μV.
2. Set generator at 0ddm (0 tone ratio) and adjust R943 for 0mV deflection.
3. Apply a .091ddm tone ratio with 150Hz predominate and adjust R941 for 78μA deflection $\pm$8μA.
4. Repeat steps 2 and 3 until no further improvement is obtained.
5. Apply a .091ddm tone ratio with 90Hz predominate and observe deviation current to be 78μA $\pm$ 8μ

5.2.3 FINAL TEST PROCEDURE

The following test is provided to aid the technician in locating troubled areas within the radio.

The test is directed in two ways:

A. A test before any troubleshooting work is accomplished.

B. As a complete return to service test after any troubleshooting has been accomplished.

To use the test in step A, accomplish and verify only those steps on the Test Data Sheet (Figure 5-3) indicated by an asterisk. Complete all the steps before any maintenance is performed. This will help in determining the overall problem with the radio.

To use the test in step B, perform all the steps on the Test Data Sheet, Figure 5-3.

TEST DATA SHEET

Serial No. _____

* A. CONTROL FUNCTIONS

NOTE: The term "OK" indicates that particular function is operating properly.

1. Display: _____OK

2. Transfer Switches

   NAV: _____OK (Switches from an active to standby freq.)

   COMM: _____OK (Switches from an active to standby freq.)

3. Frequency Controls:

	Increment Roll over Characteristics	Decrement Roll under Characteristics	
COMM MHz	(135 to 118MHz)	(118MHz to 135MHz)	_____OK
COMM KHz	(.975 to .000KHz)	(.000KHz to .975KHz)	_____OK
NAV MHz	(117 to 108MHz)	(108MHz to 117MHz)	_____OK
NAV KHz	(.95 to .00KHz)	(.00KHz to .95KHz)	_____OK

4. Memory: _____OK

   When the unit is turned "OFF" and then back "ON" that the last active and standby frequencies entered are displayed.

5. 25KHz Switch: _____OK

   The 25KHz switch channels the Comm to increment in 25KHz.

6. Radial Switch:

   Channel "USE": _____OK

   Displays the "Standby" frequency when pushed in.

   Radial Information: _____OK

   Displays "Radial" information when pulled out.

   VOR Flag: _____OK

   Displays 3 bars when not channeled to an active VOR frequency.

   ILS Flag: _____OK

   Displays 3 bars when channeled to an ILS frequency.

7. ILS Enable: _____OK

   When channeled to an active GS frequency the radio ILS energize is activated. Line pulls to within 0.5 volts DC of the ILS Common.

B. COMM RECEIVER

1. Receiver Sensitivity:

   Input a 2 microvolts standard audio test signal into the unit. Disable the audio compressor by grounding Pin 1 on P401. Monitor receiver audio while switching modulation off.

   a. S+N/N: 118.000MHz_____NLT 6dB
      126.50MHz _____NLT 6dB
      135.95MHz _____NLT 6dB

   b. Quieting _____NLT 25dB S+N/N

FIGURE 5-3 TEST DATA SHEET
Sheet 1 of 7

Input a 100 microvolts standard audio test signal into the unit. Disable the compressor by grounding Pin 1 of P401. Monitor receiver audio and remove modulation.

2. AGC Characteristics:_____NMT 3dB

With the unit set to 126.5MHz monitor the receiver output. Vary the input from 5μV to 20KμV.

3. Selectivity:

Using the AGC voltage produced by a 3μV standard signal reference, measure and record the frequencies which reproduce the AGC REF voltage at 6dB and 60dB above the reference input.

a. 6dB Bandwidth:
126.50MHz: Above_____ ≥126.508 MHz Below _____ ≤126.492 MHz - 25KHz Units
_____ (≥126.515 MHz) _____ (≤126.485 MHz) - 50KHz Units

b. 60dB Bandwidth:
126.50MHz: Above _____ ≤126.520MHz Below _____ ≥126.480MHz - 25KHz Units
_____ (≤126.543MHz) _____ (≥126.457MHz) - 50KHz Units

4. Volume Gain Control: Min_____20mV Max. _____ NLT 7.07V at 500 ohm

Input a standard 100μV signal into the unit. Disable the squelch control by pulling the volume knob out and monitoring the audio output.

5. Audio Distortion: 350Hz = _____ (15% Max) 1KHz = _____ (15% Max)
2.5KHz = _____ (15% Max)

Input a 100μV 85% modulated signal between 350Hz and 2500Hz. (This is an optional test that requires a distortion analyzer)

6. Audio Response: 350Hz = _____ NMT 6dB down 1KHz = 0dB 2.5KHz = _____ NMT 6dB down

Input a standard 100μV signal into the unit. Disable the compressor at pin 1 P401. Monitor the receiver output.

7. Compressor: _____NMT ± 3 dB

Input a standard 100μV signal into the unit. Vary the modulation from 30% to 85%.

* 8. Squelch:

NOTE: Squelch adjustments must be performed in the following order:

a. Set the unit at 126.50MHz.

b. Carrier/Noise Squelch set to open at 2μV +1μV -.5μV and to close at NMT 4dB below the squelch opening.

c. Carrier/Noise Squelch_____OK.

d. With the unit set to 126.50MHz input a 8KHz 85% modulated signal into the unit. Set the Carrier Squelch to open at 12.5μV ± 3μV

e. Carrier Squelch _____OK

f. Intercom: _____NLT 100mW into 500 ohm
Input a 100mV 1KHz signal into the Intercom pin of P401.

C. TRANSMITTER

* 1. Power Out:

Connect a wattmeter to the antenna output and record the following unmodulated values.

Set A + Input to _____ 13.75VDC @ Pin 14 & R _____
27.5VDC @ Pin 13 & P _____

118.00MHz _____10 Watts min. 126.50MHz _____10 Watts min. 135.97MHz _____10 Watts min.

FIGURE 5-3 TEST DATA SHEET
Sheet 2 of 7

After 2 minutes continuous key:

118.00MHz _____2.5 Watts min. 126.50MHz _____2.5 Watts min. 135.97MHz _____2.5 Watts min.

Low voltage: With a low line voltage input the following values should be observed.

22 VDC for 27.5V units
11 VDC for 13.75V units.

118.00MHz _____5 Watts min. 126.50MHz _____5 Watts min. 135.97MHz _____5 Watts min.

* 2. Modulation: Capabilities

Input a standard modulator test signal into the microphone audio. Using the linear detector measure the Tx modulation.

a. 118.00MHz:_____NLT 85%
126.50MHz:_____NLT 85%
135.97MHz:_____NLT 85%

b. Carrier Noise Level:

Modulate the carrier with 85% at 1000Hz. *Noise on the carrier with modulation removed shall be NLT.

118MHz_____>40dB*
126.5MHz_____>40dB*
135.95MHz_____>40dB*

* c. Demodulated Audio Distortion. This is an optional test that requires a distortion analyzer.

Harmonic Distortion

350Hz_____15%*
1KHz_____15%*
2.5KHz_____15%*

* d. Headphone Sidetone:

Input a 1000Hz, 85% Mod signal into the microphone audio. Monitor the headphone output. Set the volume control to midrange. Vary R512 over its full range. Output variation should be:

_____.003 Volts (Max) _____7.07 Volts (Min.) Measured with 500 ohm load

_____ Set R512 for 1.40 at end of test

D. NAVIGATION RECEIVER

* 1. VOR Flag Sensitivity: (KX 165 Only)

Input a standard Nav signal at 2μV. Monitor the flag.

Frequency	Half Flag (190mV)
108.00	_____OK
114.90	_____OK
117.95	_____OK

FIGURE 5-3 TEST DATA SHEET
Sheet 3 of 7

* 2. RF Sensitivity:

Input a 2 microvolts standard audio test signal to any channel. Monitor the receiver audio while switching modulation off.

Frequency	S + N/N	
108.00	_____	6dB min
114.90	_____	6dB min
117.95	_____	6dB min

3. Quieting:

Input a standard audio signal at 100μV. Monitor receiver and remove modulation.

112.50MHz: _____dB (S+N/N NLT 20dB)

4. Selectivity:

Using the AGC voltage produced by a 10μV 112.5MHz RF signal as a reference monitor and record the frequencies which reproduce the AGC REF voltage at 6dB and 60dB above the reference input.

112.50MHz:	Upper 6dB	_____	112.515 Min.
	Lower 6dB	_____	112.485 Max.
	6dB Bandwidth	_____	32KHz Min.
	Upper 60dB	_____	112.542 Max.
	Lower 60dB	_____	112.458 Min.

* 5. Course Accuracy: (KX 155 Only)

Input a 100μV RF signal into the unit.

Radial (Degrees)	Bearing Error D-Bar (2°) Max.
0° from	_____
90° from	_____
180° from	_____
270° from	_____

6. AGC

Vary the input from 5μV to 20KμV with a standard audio test signal. Monitor the receiver output.

112.5MHz: Audio level variation_____dB (3dB Max)

Bearing Variation _____ (1° Max at 0° from Radial)

* 7. NAV Audio Output: _____VRMS (7.07VRMS Min)

Input a 20μV standard audio signal into the unit.

8. Minimum NAV Audio Output: _____VRMS (.02VRMS Max)

Vary R347 over its full range. Nav audio output variation should be:

FIGURE 5-3 TEST DATA SHEET
Sheet 4 of 7

9. Audio Frequency Response:

Input a 100μV RF signal into the unit.

1KHz Ref. _____dB

350KHz Ref. _____dB (6dB Max)

2500KHz Ref. _____dB (6dB Max)

10. Voice/Ident: _____dB (20dB Min)

Input a 100μV, 30% mod at 1020Hz into the unit. Monitor receiver audio while pulling ident filter switch.

*E. VOR/LOC CONVERTER (KX 165 Only)

Input a standard VOR signal into the unit.
Monitor the radial information on the display.

1. DIGITAL VOR Bearing Error

CENTERING ERROR NMT ± 1.5°
D-BAR

RADIAL	TO	FROM	*Digital
0°	_____	_____	_____
30°	_____	_____	_____
60°	_____	_____	_____
90°	_____	_____	_____
120°	_____	_____	_____
150°	_____	_____	_____

DIGITAL RADIAL ERROR NMT ± 1.5°
D-BAR

RADIAL	TO	FROM	*Digital
180°	_____	_____	_____
210°	_____	_____	_____
240°	_____	_____	_____
270°	_____	_____	_____
300°	_____	_____	_____
330°	_____	_____	_____

2. VOR Deflection

Generator (From Radial)	Electrical Output(MV)
OBS -10°	_____+150mV ± 10mV
OBS +10°	_____-150mV ± 10mV

3. VOR Alarm Signal

Input a standard VOR signal into the unit.

a. Composite Level: .350VRMS, Alarm Voltage _____ 150mV (Max)

Composite Level: .500VRMS, Alarm Voltage _____ 325mV (Min)

b. Ref Only Applied, Alarm Voltage _____ 125mV (Max)

Var Only Applied, Alarm Voltage _____ 125mV (Max)

4. TO-FROM Signal

a. Polarity and Level:

TO Voltage _____ 300mV ±30%

FROM Voltage _____ 300mV ±30%

b. Change Over

Generator (From Radial)	TO-FROM Voltage
OBS + 75°	_____40mV min
OBS + 105°	_____40mV min

5. LOC Centering Voltage: .35VRMS LOC signal _____ 0 ± 7mV

Input a standard LOC signal into the unit.

FIGURE 5-3 TEST DATA SHEET
Sheet 5 of 7

6. Deflection

Tone Ratio	Deflection Polarity (Left or Right)	Electrical Output
150Hz + 4dB	Left	_____ -90mV ± 7
90Hz + 4dB	Right	_____ +90mV ± 7

7. LOC Alarm Signal

   a. Composite Level: .35VRMS, Alarm Voltage _____ 325mV min

   b. 90Hz Only Alarm Voltage: _____ 125mV max
      150Hz Only Alarm Voltage: _____ 125mV max

F. LOCALIZER CHARACTERISTICS

Input a standard LOC centering signal at 1000μV RF level.

Composite Level Set: _____VACRMS (.35 ± .01)

G. GLIDESLOPE RECEIVER/CONVERTER

Input a standard GS deviation signal into the unit. Monitor flag for 190mV.

1. Sensitivity:

   329.15MHz (108.95)_____μV 20μV max

   332.00MHz (109.30)_____μV 20μV max

   335.00MHz (110.30)_____μV 20μV max

2. Selectivity:

   With AGC voltage produced by a 20μV RF signal as a reference, monitor and record the frequency which reproduce the AGC reference voltage at 6dB and 60dB above the reference input.

   Upper 6dB Frequency _____ (≥ 332.025MHz)

   Lower 6dB Frequency _____ (≤ 331.975MHz)

   Upper 60dB Frequency _____ (≤ 332.150MHz)

   Lower 60dB Frequency _____ (≥ 331.850MHz)

3. Centering:

   Input a 700μV -0ddm signal into the unit. Monitor the D-Bar.

   332.00MHz (109.30) _____μA (±10μA)

4. Deflection:

   150Hz Predominant
   (+2dB or +.091ddm)

   332.00MHz (109.30) 700μV RF level _____μA (78 ± 10μA)

   90Hz Predominant
   (2dB or +.091ddm)

   332.00MHz (109.30) 700μV RF level _____μA (78 ± 10μA)

FIGURE 5-3 TEST DATA SHEET
Sheet 6 of 7

5. Flag Current:

RF Signal Absent_____μA (125μA max)

90Hz Absent_____μA (125μA max)

150Hz Absent_____μA (125μA max)

Standard Signal_____μA NLT 260μA

*G. AUDIO AMPLIFIER WITH COMM RECEIVER AND NAV RECEIVER (KX 155 ONLY)

1. Audio Output Power

a. COM_____(4W min/13.75V unit, 8W min/27.5V unit)

Insert a 100μV RF carrier modulated 30% at 1KHz into the Comm Receiver. With the NAV volume control at minimum (CCW), monitor the audio amp output.

b. NAV_____(4W min/13.75V unit, 8W min/27.5V unit)

Insert a 100μV RF standard audio test signal into the NAV receiver. With the Comm volume control at minimum, monitor the audio amp output.

c. ADF_____(4W min/13.75V unit, 8W min/27.5V unit)

Insert a 1KHz 4.47V (40mW @ 500 ohms) audio signal to the ADF input. With the Comm & Nav volume controls at minimum, monitor the audio amp output.

d. AUX_____(4W min/13.75V unit, 8W min/27.5V unit)

Insert a 1KHz 4.47V (40mW @ 500 ohms) audio signal to the ADF input. With the Comm & Nav volume controls at minimum, monitor the audio amp output.

2. Quieting

a. COMM S+N/N_____dB (NLT 25dB)

Input a 100μV standard audio test signal into the unit. Disable the compressor by grounding Pin 1 of P401. Monitor the audio amp output while removing modulation.

b. NAV S+N/N_____dB (NLT 20dB)

3. Audio Frequency Response

Insert a 100 μV signal (*) into the antenna input. Monitor the audio amp output.

a. COMM *RF Signal Mod. 30%

1KHz (Ref.)_____dB

350Hz_____dB (NMT 6dB variation)

2.5KHz_____dB

b. NAV *Standard Audio Test Signal

1KHz (Ref.)_____dB

350Hz_____dB (NMT 6dB variation)

2.5KHz_____dB

150Hz_____dB (NLT 20dB Down)

9KHz_____dB (NLT 20dB Down)

4. Audio Distortion (Optional Test Requiring Distortion Analyzer)

a. COMM_____% (NMT 15%)

b. NAV_____% (NMT 15%)

FIGURE 5-3 TEST DATA SHEET
Sheet 7 of 7

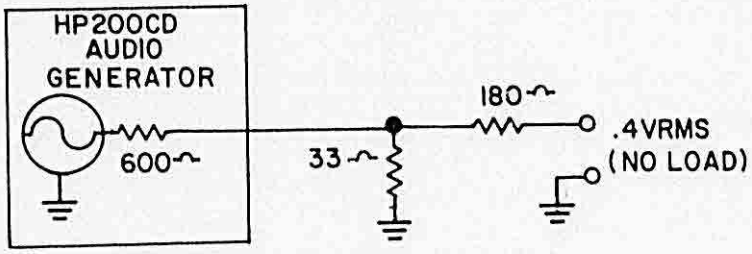

TEST CIRCUIT

FIGURE 5-3 AUDIO INJECTIONS CIRCUIT

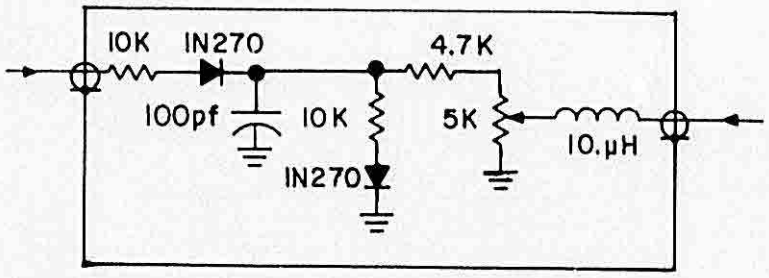

FIGURE 5-4 LINEAR DETECTOR

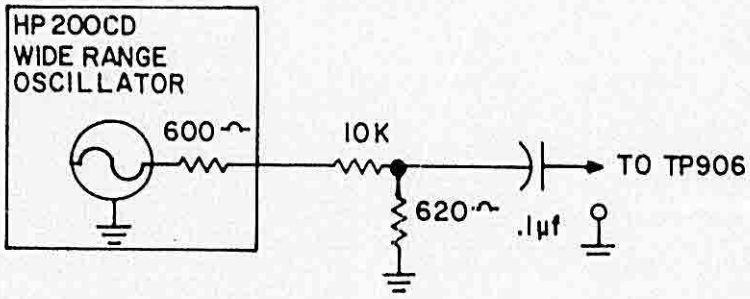

FIGURE 5-6 ELLIPTIC FILTER TUNING INJECTION CIRCUIT

5.3 OVERHAUL

5.3.1 VISUAL INSPECTION

This section contains instructions to assist in determining, by inspection, the condition of KX 155/165 assemblies. Defects resulting from wear, physical damage, deterioration, or other causes can be found by these inspection procedures. To aid inspection, detailed procedures are arranged in alphabetical order.

A. Capacitors, Fixed

Inspect capacitors for case damage, body damage, and cracked, broken, or charred insulation. Check for loose, broken, or corroded terminal studs, lugs or leads. Inspect for loose, broken, or improperly soldered connections.

B. Capacitors, Variable

Inspect trimmers for chipped and cracked bodies, damaged dielectrics and damaged contacts.

C. Chassis

Inspect the chassis for deformation, dents, punctures, badly worn surfaces, damaged connectors, damaged fastener devices, loose or missing hardware, component corrosion, and damage to the finish.

D. Connectors

Inspect connectors for broken parts, deformed shells or clamps, and other irregularities. Inspect for cracked or broken insulation and for contacts that are broken, deformed, or out of alignment. Also, check for corroded or damaged plating on contacts and for loose, improperly soldered, broken, or corroded terminal connections.

E. Covers and Shields

Inspect covers and shields for punctures, deep dents, and badly worn surfaces. Also, check for damaged fastener devices, corrosion and damage to finish.

F. Fuse and Clips

Inspect for blown fuse and check slips for loose or corroded connections.

G. Insulators

Inspect insulators for evidence of damage, such as broken or chipped edges, burned areas, and presence of foreign matter.

H. Jacks

Inspect all jacks for corrosion, rust, deformations, loose or broken parts, cracked insulation, bad contacts, or other irregularities.

I. Potentiometers

Inspect all potentiometers for evidence of damage or loose terminals, cracked insulation or other irregularities.

K. Resistors, Fixed

Inspect the fixed resistors for cracked, broken, blistered, or charred bodies and loose, broken, or improperly soldered connections.

L. RF Coils

Inspect all RF coils for broken leads, loose mountings, and loose, improperly soldered, or broken terminal connections. Check for crushed, scratched, cut or charred windings. Inspect the windings, leads, terminals and connections for corrosion or physical damage. Check for physical damage to forms and tuning slug adjustment screws.

M. Terminal Connections Soldered

1. Inspect for cold-soldered or resin joints. These joints present a porous or dull, rough appearance. Check for strength of bond using the points of a tool.

2. Examine the terminals for excess solder, protrusions from the joint, pieces adhering to adjacent insulation, and particles lodged between joints, conductors, or other components.

3. Inspect for insufficient solder and unsoldered strands of wire protruding from conductor at the terminal. Check for insulation that is stripped back too far from the terminal.

4. Inspect for corrosion at the terminal.

N. Transformers

1. Inspect for signs of excessive heating, physical damage to case, cracked or broken insulation, and other abnormal conditions.

2. Inspect for corroded, poorly soldered, or loose connecting leads or terminals.

O. Wiring/Coaxial Cable

Inspect open and laced wiring of chassis, subassembly chassis and parts of equipment for breaks in insulation, conductor breaks, cut or broken lacing and improper dress in relation to adjacent wiring or chassis.

5.3.2 CLEANING

A. Using a clean, lint-free cloth lightly moistened with a regular cleaning detergent, remove the foreign matter from the equipment case and unit front panels. Wipe dry using a clean, dry, lint-free cloth.

B. Using a hand controlled dry air jet (not more than 15psi), blow the dust from inaccessible areas. Care should be taken to prevent damage by the air blast.

C. Clean the receptacles and plugs with a hand controlled dry air jet (not more than 25psi), and a clean, lint-free cloth lightly moistened with an approved cleaning solvent. Wipe dry with a clean, dry, lint-free cloth.

5.3.3 REPAIR

This section describes the procedure along with any special techniques for replacing damaged or defective components.

A. Connectors

When replacing a connector, refer to the appropriate PC board assembly drawing and follow notes to insure correct mounting and mating of each connector.

B. Crystal

The use of other than a King crystal is considered an unauthorized modification.

C. Diodes

Diodes used are silicon and germanium; use long nose pliers as a heat sink under normal soldering conditions. Note the diode polarity before removal.

D. Integrated Circuits

Refer to Appendix "A" for removal and replacement instructions.

E. Wiring/Coaxial Cable

When repairing a wire that has broken from its terminal, remove all old solder and pieces of wire from the terminal, restrip the wire to the necessary length and resolder the wire to the terminal. Replace a damaged wire or coax with one of the same type, size and length.

5.3.4 KX 155/165 DISASSEMBLY

5.3.4.1 Removal of the Top & Bottom Covers

A. Remove the twelve (12) screws from the bottom cover. Do not remove the screws from the preselector.

B. Remove the bottom cover.

C. Remover the two (2) right end screws that hold the Receiver Board in place. NOTE: The front of the unit is facing away from you.

D. The hinged Receiver Board will now swing out.

E. Remove the four (4) screws from the top cover marked "OPEN".

F. The hinged top cover will now swing out.

5.3.4.1 Removal of the Glideslope Receiver Board

A. Disconnect the ribbon connector P404 on the main board assembly. There are two ribbon connectors together on the main board assembly. One is the VOR/LOC converter connector P402, the other is the glideslope receiver board connector P404.

B. Unsolder the Coax cable from the main board at E449.

C. Remove the four screws that attach the glideslope receiver to the hinge top.

D. Removal of the PC board from the casting is accomplished by removing the screws that retain the PC board to the casting.

5.3.4.2 Removal of the VOR/LOC Converter

A. To obtain access to the VOR/LOC converter, first remove the two side screws and the two top screws on the cover. The top cover will then swing open.

B. Once the lid has been opened, access to the VOR/LOC converter is possible.

C. Disconnect the one ribbon connector P402 from the main board.

D. Remove the seven screws and nut assemblies that hold the board to the hinge top.

5.3.4.3 Removal of the Receiver/Transmittor board

A. First remove the bottom cover via the screws that attach the cover to the main casting to the radio.

B. To gain access to the receiver board, the unit is mounted on hinges. The removal of three screws from the PC board will allow the hinge assembly to swing open.

C. Disconnect the ribbon connector J403 from the main board assembly.

D. Unsolder the LO coax cables, one running to the NAV side receiver at E348, second running to the COMM receiver at E347.

E. Disconnect coax center conductor and ground from E305 between the transmitter and the front end of the COMM receiver.

F. Unsolder the coax at E302.

G. Unsolder the two wires from the main receiver board assembly at E300, Blk/Wht, or Grn. for 14V and E301 Brn/Wht.

H. Disconnect the black wire that runs between the transmitter and the receiver board at E308.

I. Disconnect the Orn/Wht wire that runs between the transmitter and the receiver board E304.

J. Remove the screw holding Q1100 to the main casting next to the power supply.

K. Disconnect the Grn/Wht wire running between ground of Q1101 and the receiver board E309.

L. Disconnect the Yel/Wht wire running from E310 on the receiver board.

M. Remove the twelve #4 screws retaining PC board to the casting.

NOTE

ELEVEN SCREWS FROM THE NON-COMPONENT SIDE WHILE ONE SCREW ENTERS AT THE TOP OF THE BOARD NEAR THE RIBBON CONNECTOR.

5.3.4.4 Removal of the Transmitter Board

A. First disconnect the black lead leading from receiver board to the transmitter board at E808.

B. Remove the Brn/Wht wire leading to the receiver board to the transmitter board at E801.

C. Remove the Orn/Wht wire leading to the receiver board to the transmitter board at E804.

D. Remove the Blk/Wht wire leading to the transmitter board at E800.

E. Remove the coax leading to the transmitter board at E802.

F. Unsolder the center coax connector that runs through the PC board at E806.

G. Disconnect the antenna semi-conductor at E807.

H. Remove the two screws from each output transmitter. There will be a total of four screws.

I. Remove the seven screws holding the PC board to the casting.

5.3.4.5 Removal of the Display

A. Remove the four screws that retain the bezel to the chassis.

B. Remove bezel.

C. Carefully lift the display up and out of the dip socket.

NOTE

DO NOT USE ANY METALLIC TOOLS TO REMOVE THE DISPLAY
THE USE OF AN ORANGE STICK IS RECOMMENDED

5.3.4.6 Removal of the Main Board and Display Board

A. The main board and display board will have to be removed consecutively since they are joined together by 90° pins.

B. Remove the two Adel clamps holding the bundle of wires on the right hand side of the radio chassis.

C. Disconnect the three ribbon connectors P402, P403, P404 from the main board assembly.

D. Disconnect the Red/Wht wire that runs to the power supply on the capacitors at E204.

E. Disconnect the Blk wire that runs to the capacitors at E201.

F. Disconnect the three coax cables at E447, E448 and E449.

G. Remove the two screws that retain the two transistors Q402 and Q405 to the chassis of the radio.

H. Remove the four screws that retain the main PC board to the chassis.

I. Remove one stand-off screw on the main board.

J. Carefully remove the display. See Section 5.3.4.5.

K. Remove the four screws that retain the display board to the chassis.

5.3.5 KX 155/165 ASSEMBLY

To reassemble or install any PC board assembly, repeat those steps called out in the disassembly procedures in reverse order. Close attention should be maintained to the routing of coax cables and ribbon connectors.

5.4 TROUBLESHOOTING

This troubleshooting section is intended as a guide for the technician in isolating a malfunction in the KX 155/165. Before troubleshooting the radio, a thorough understanding of the Theory of Operation should be accomplished. The technique (fault finding through elimination) should be used as a basis in locating the troubled area. The following steps should be performed before any troubleshooting procedures are applied.

A. Perform a bench check to determine if the unit is the source of the problem.

B. Determine the exact problem. Is it the COMM section or the NAV section?

C. If the problem is in the COMM, is it the receiver or is it the transmitter?

D. Is the problem in the NAV Section?

E. If the problem is in the NAV Section, does it affect either the VOR/LOC or glideslope?

Once you have determined the problem section, consult the troubleshooting flow charts and schematics for information pertaining to voltages and waveforms. The troubleshooting section is divided into two parts: Communications and Navigation.

5.4.1 POWER SUPPLY TROUBLESHOOTING

In troubleshooting the power supply, consult Figure 6-11 for component location.

A. Verify 27.5 volts or 13.75 at each end of fuse F401.

B. Verify +10 ± 1 volts at CR412 cathode.

C. Verify +5 ± 2.5 volts at cathode of CR413.

D. Verify -26 ± 3 volts at anode of CR414.

E. Verify +9 ± .5 volts at the collector of Q405.

F. Verify +192 ± 10 volts at the collector of Q403.

NOTE

USE CAUTION IN MEASURING THE VOLTAGE AT THE COLLECTOR OF Q403.

If voltages are present but low, verify that the power supply is not in current limiting. Verify that pin 14 of I401 has the waveform depicted on the schematic.

If the unit is not in current limiting, first verify that all voltages and waveforms as depicted on the schematics exist.

5.4.2 SYNTHESIZER FREQUENCY COMM

Verify reference frequency 12.8MHz at pin 15, I410.

5.4.3 TUNING VCO VOLTAGE

A. With the "use" frequency at 135.97MHz receive, the voltage at TP201 should be approximately 8.99 volts.

B. With the "use" frequency at 118.00MHz receive, the voltage at TP201 should be approximately 4.29 volts.

C. With the "use" frequency at 118.00MHz transmit, the voltage at TP201 should be approximately 1.87 volts.

D. With the "use" frequency at 126.97MHz receive, the voltage at TP201 should be approximately 6.59 volts.

E. The voltage at the cathodes of CR200A, CR200B, CR200C and CR200D should be approximately those voltages shown in Table 5-1.

5.4.4 COMM LOCAL OSCILLATOR

A. Verify that the LO level is more than 0.5 volt peak-to-peak at R218 with an oscilloscope.

B. Verify that the LO is 11.4MHz above the desired frequency with a frequency counter.

5.4.5 DETECTOR

Verify approximately 2V p-p at TP209 with 100μV, 30% modulation at 1KHz.

5.4.6 AGC AMPLIFIER

A. Set frequency at 126.97MHz at -50dBm (1mV).

B. The voltage at TP202 is typically 4.89V with 100μV signal, 3.82 with no signal.

C. The voltage at TP203 is typically 3.66V with 100μV signal, 6.96 with no signal.

5.4.7 SQUELCH GATE

Verify approximately 6.0 at emitter Q205 with 100μV, 30% modulation at 1KHz.

5.4.8 AUDIO

With 100μV, 30% modulated at 1KHz in the audio output should be 100mW minimum with the volume control clockwise.

5.4.9 TRANSMITTER (Connect to 50 ohm load)

A. Verify correct frequency at buffer output (E802).

B. Verify E804 at +8.12V $\pm$ 2VDC.

C. Verify E800 at 11.85VDC $\pm$ 2VDC (7.5VDC on 13.75 radio).

D. Verify E801 at 12.50VDC $\pm$ 2VDC (6.6VDC on 13.75 radio).

Frequency	Tuning Voltage
118.00	4.29
119.00	4.54
120.00	4.79
121.00	5.04
122.00	5.30
123.00	5.55
124.00	5.81
125.00	6.07
126.00	6.33
127.00	6.60
128.00	6.85
129.00	7.12
130.00	7.39
131.00	7.65
132.00	7.92
133.00	8.19
134.00	8.46
135.00	8.73
135.975	8.99

TABLE 5-1 COMM RECEIVER TUNING VOLTAGES

5.5 NAV RECEIVER

5.5.1 VCO TUNING VOLTAGE

Verify that the tuning voltages in Table 5-2 are present during the tuning of the frequency band.

5.5.2 LO INJECTION

Verify at TP205 that the LO is 11.1MHz below the input frequency.

5.5.3 RF AGC ACTION.

Verify at TP207 that the voltage is approximately 4.04 DC with a -50dBm standard signal at 113.00.

Verify that the voltage is approximately 7.13 without a signal input. This should verify AGC action throughout the frequency band.

5.5.4 IF AGC ACTION

TP206, verify at 113.00 that the voltage with a signal is approximately 5.05VDC.

Verify that the AGC voltage at TP206 is approximately 3.66VDC without a signal input.

5.5.5 AUDIO

With 100 microvolt, 30% modulator, that 1KHz in the audio output should be 100 milliwatt minimum with volume control clockwise.

5.5.6 NAV COMPOSITE

Verify at pin 14 of I303D that .5 volt RMS for VOR or .35 RMS for localizer exists at the NAV composite output.

5.5.7 VOR CONVERTER

The best means of troubleshooting the VOR converter is first verify that all waveforms and voltages do exist. Should a waveform not exist or appears inaccurate, proceed by back tracking the signal to find the troubled area.

If it appears that the fault is with I608, I609 or I610, the best possible remedy for this circuit is device replacement.

Verify that all voltages do exist on the board, particularly the reference voltage.

The following voltages are only approximate measurements:

FREQUENCY	TUNING VOLTAGE	FREQUENCY	TUNING VOLTAGE
108.00	4.07 ± 20%	113.00	5.59 ± 20%
109.00	4.37 ± 20%	114.00	5.89 ± 20%
110.00	4.68 ± 20%	115.00	6.17 ± 20%
111.00	4.98 ± 20%	116.00	6.45 ± 20%
112.00	5.29 ± 20%	117.00	6.73 ± 20%
		117.95	6.99 ± 20%

TABLE 5-2 VARACTOR TUNING VOLTAGES

5.6 GLIDESLOPE TROUBLESHOOTING

5.6.1 POWER SUPPLY

A. Verify that 5 volts pin 3 is present on the glideslope board.

B. Verify at Q908 collector that 9 volts is present during glideslope operation.

5.6.2 SYNTHESIZER OPERATION

A. Verify that the 12.8MHz reference frequency is present at pin 15 of I904.

B. Verify that the clock pulse is present at pin 5 of I904.

C. Verify that data information can be seen with an oscilloscope at pin 7 of I904.

D. Verify strobe input with an oscilloscope at Pin 10 at I904.

5.6.3 VCO VOLTAGES

A. Verify that the VCO frequencies as shown in Table 5-2 are present at TP902.

5.6.4 CONVERTER OPERATION

A. Verify that the detected 90Hz and 150Hz composite signal is present at TP901.

B. Verify the 90Hz and 150Hz filter output waveforms at TP908 and TP909.

C. If the converter is inoperative, check I902A, pin 1 for a voltage source to the board.

D. Consult the waveforms and voltages on the schematic for an exact representation.

5.7 DISPLAY TROUBLESHOOTING

NOTE

USE THIS PROCEDURE IN CONJUNCTION WITH THE TROUBLESHOOTING FLOWCHART

5.7.1 ANODE DRIVE FAILURE

A. Clock

Verify the presence of a clock signal at pin 7 of I407.

B. Verify that the multiplexed anode drivers are present.

5.7.2 CATHODE DRIVE FAILURE

Cathode Drivers

Verify that the multiplexed output signals from I402 and I403 are present.

5.7.3 DISPLAY INTENSITY

A. Variable Duty Cycle Ramp

Verify that the duty cycle of the ramp at pin 9 of I1301 varies with the ambient light intensity into the photo resistor.

B. Cathode Programming

Verify that a variable amplitude and width pulse is present at I402 and I403.

5.7.4 KEEP ALIVES

A. Keep Alive Resistors

B. Verify that a 95 volt drop exists across R104, R105, R101 and R102.

5.8 ISOLATION AMP TROUBLESHOOTING

Verify all waveforms. If a waveform doesn't exist or appears inaccurate, proceed by back tracking to locate the troubled areas.

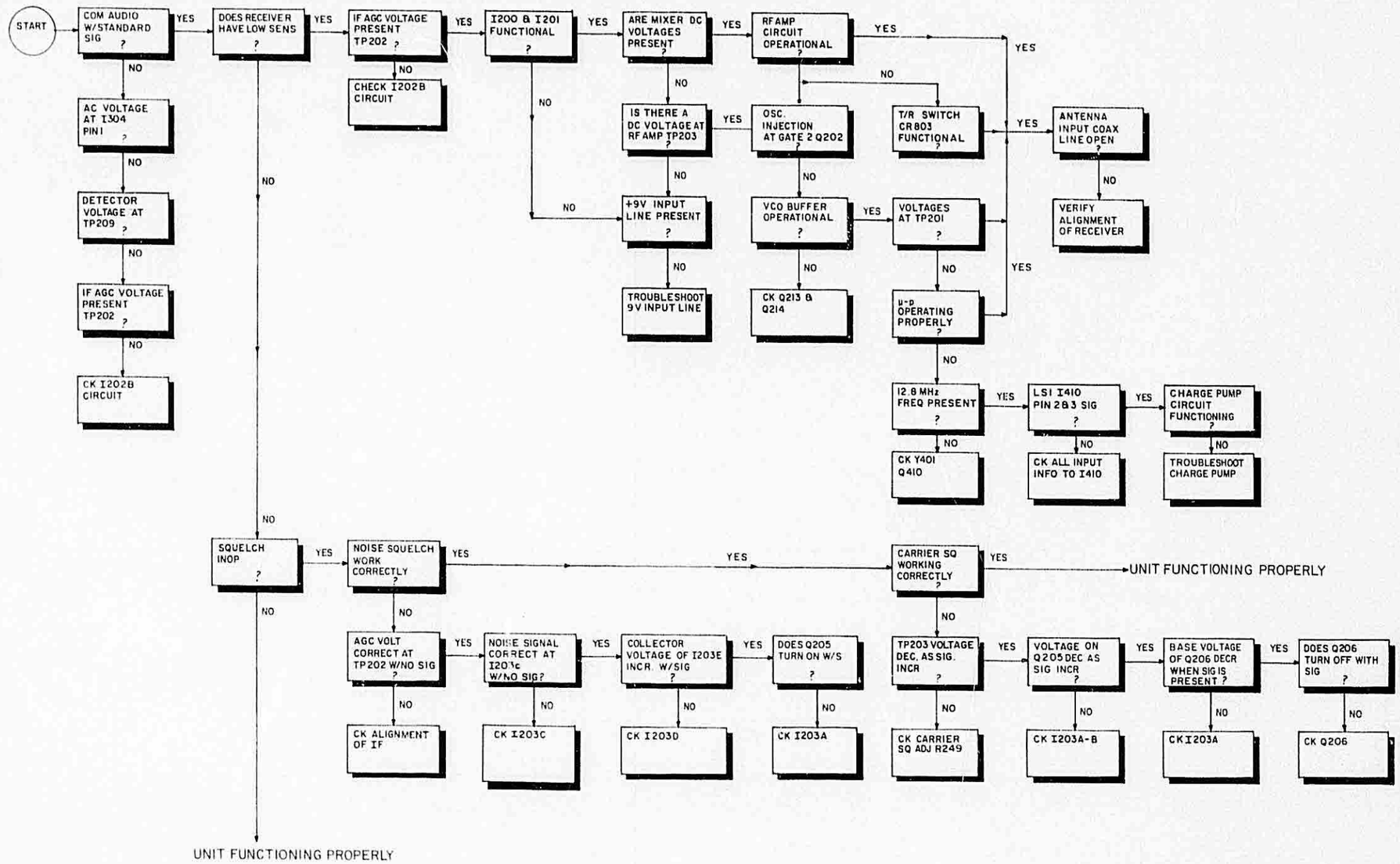

NOTE:
WHEN USING FLOWCHARTS, CONSULT THE TEST DATA AND SCHEMATIC SHEETS

FIGURE 5-7 COMM RECEIVER TROUBLESHOOTING FLOWCHART
(Dwg. No. 696-2607-00, R-0)

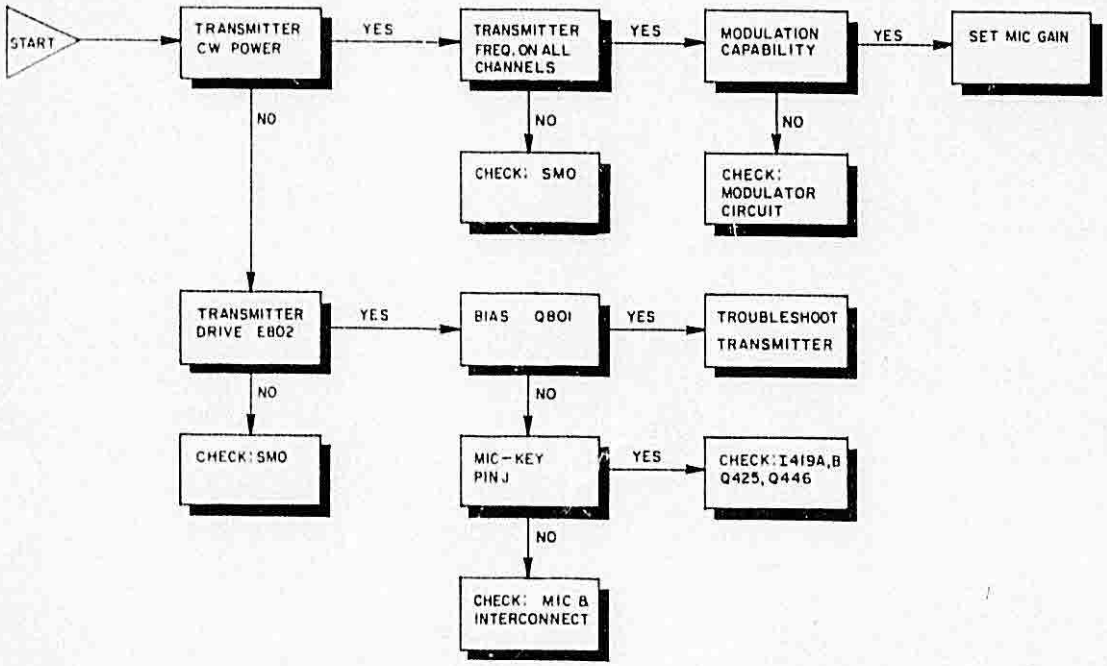

FIGURE 5-8 TRANSMITTER TROUBLESHOOTING FLOWCHART
(Dwg. No. 696-2608-00, R-0)

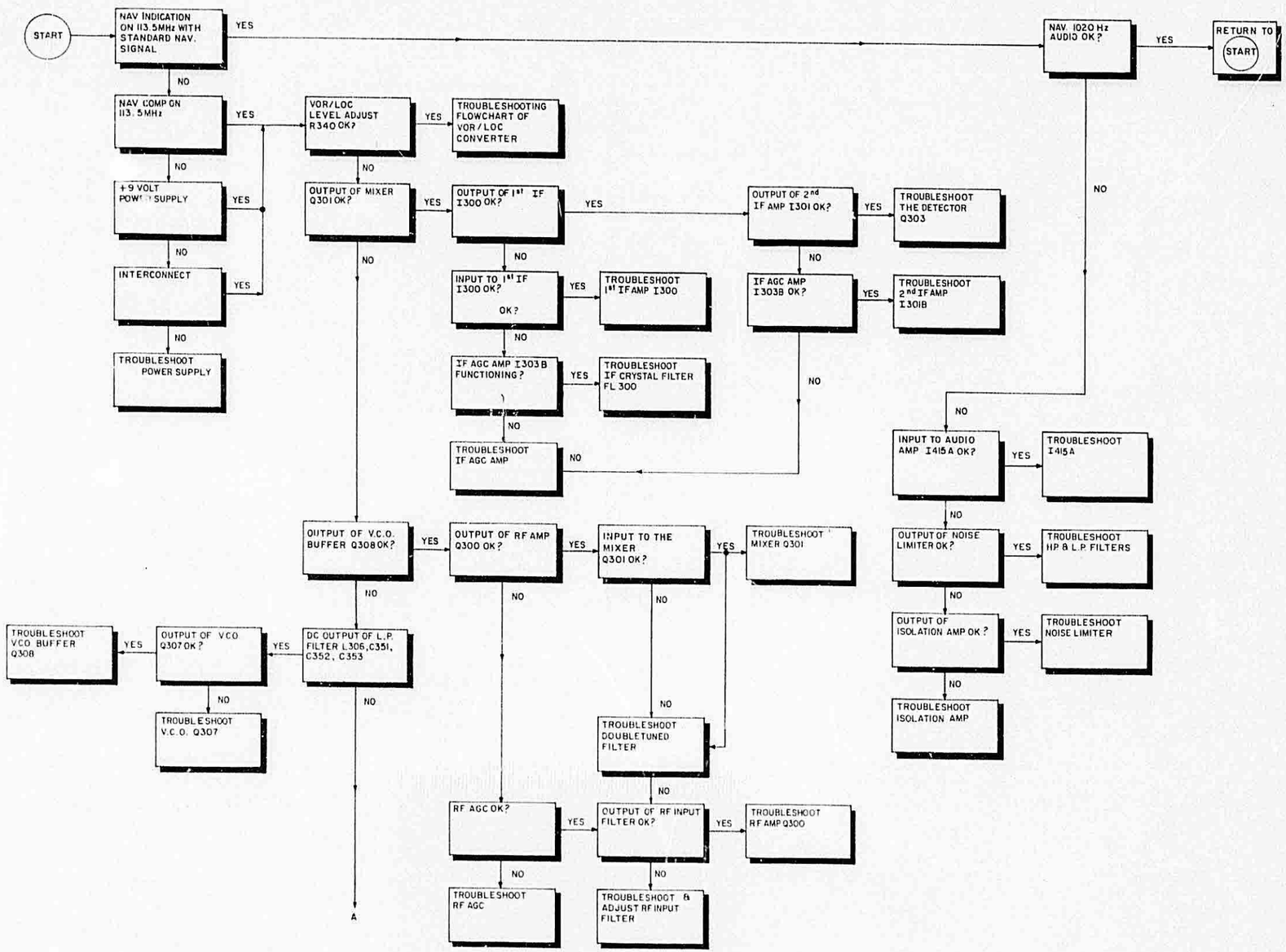

FIGURE 5-9 NAV RECEIVER TROUBLESHOOTING FLOWCHART
(Dwg. No. 696-2609-00, R-0)
(Sheet 1 of 2)

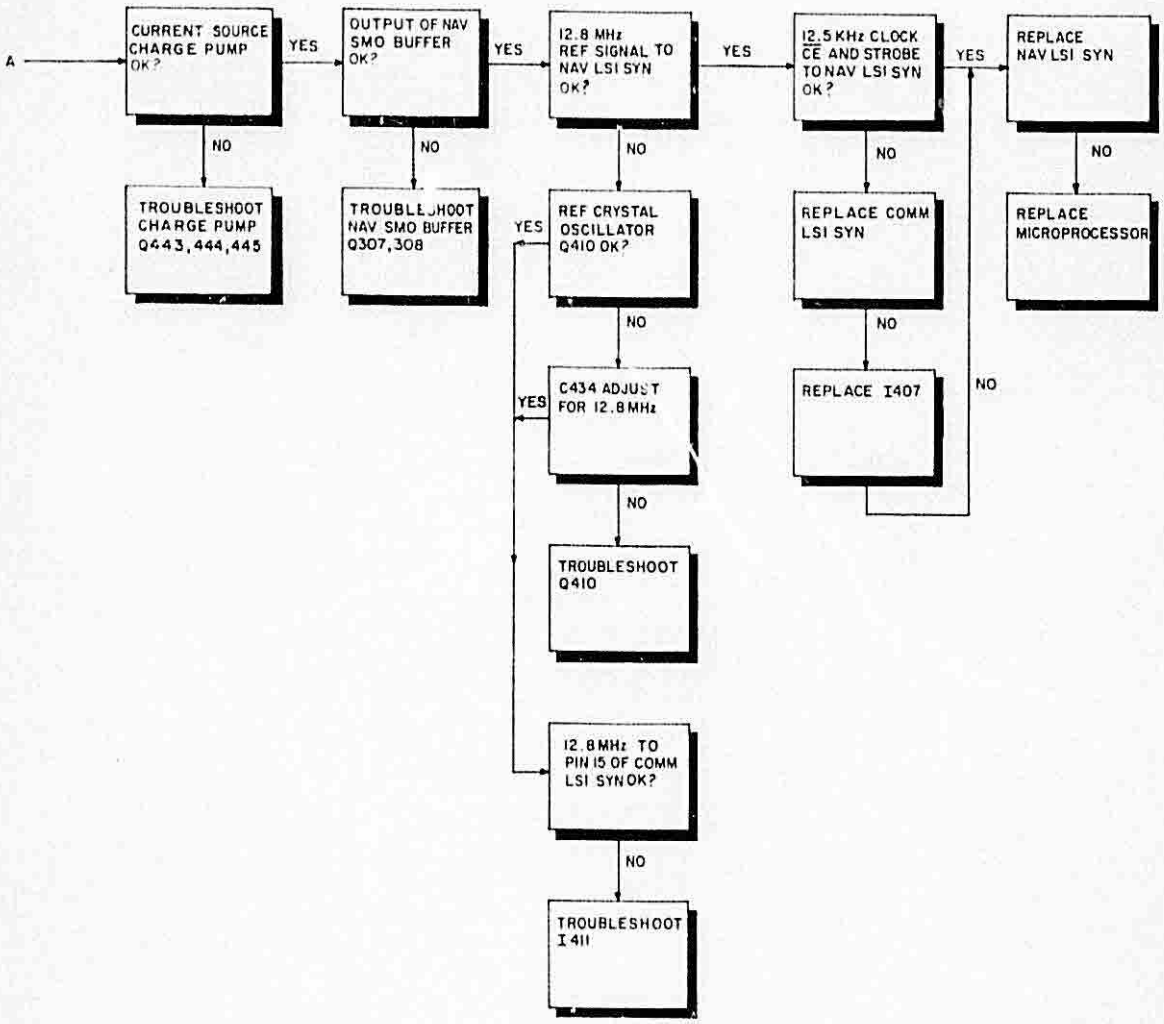

FIGURE 5-9 NAV RECEIVER TROUBLESHOOTING FLOWCHART
(Dwg. No. 696-2609-00, R-0)
(Sheet 2 of 2)

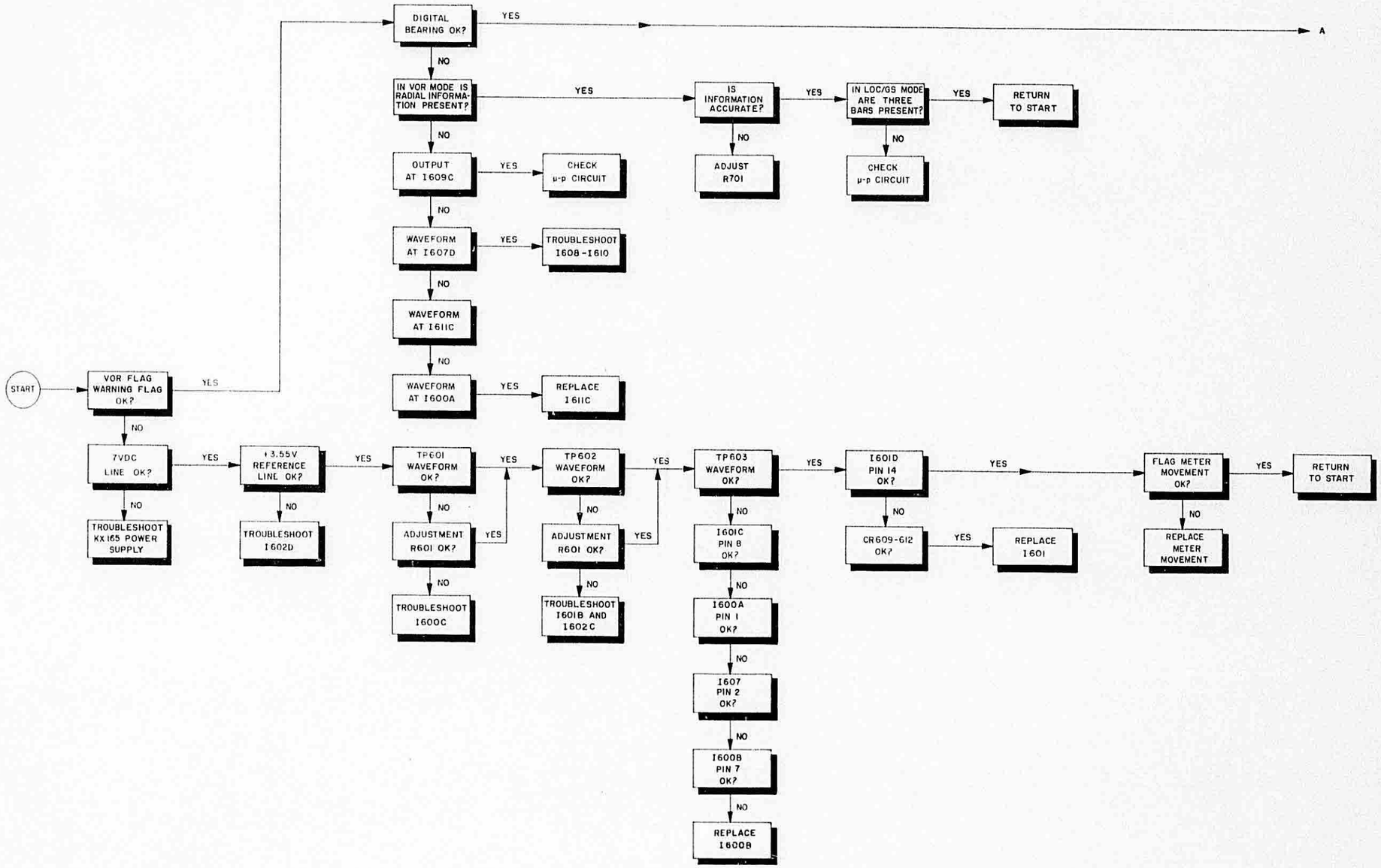

FIGURE 5-10 VOR CONVERTER TROUBLESHOOTING FLOWCHART
(Dwg. No. 696-2610-00, R-0)
(Sheet 1 of 2)

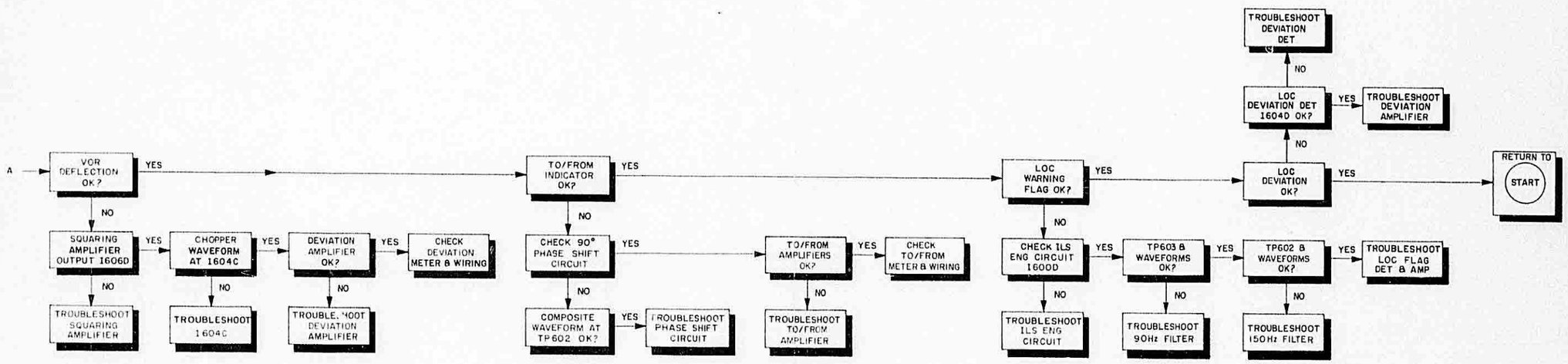

FIGURE 5-10 VOR CONVERTER TROUBLESHOOTING FLOWCHART
(Dwg. No. 696-2610-00, R-0)
(Sheet 2 of 2)

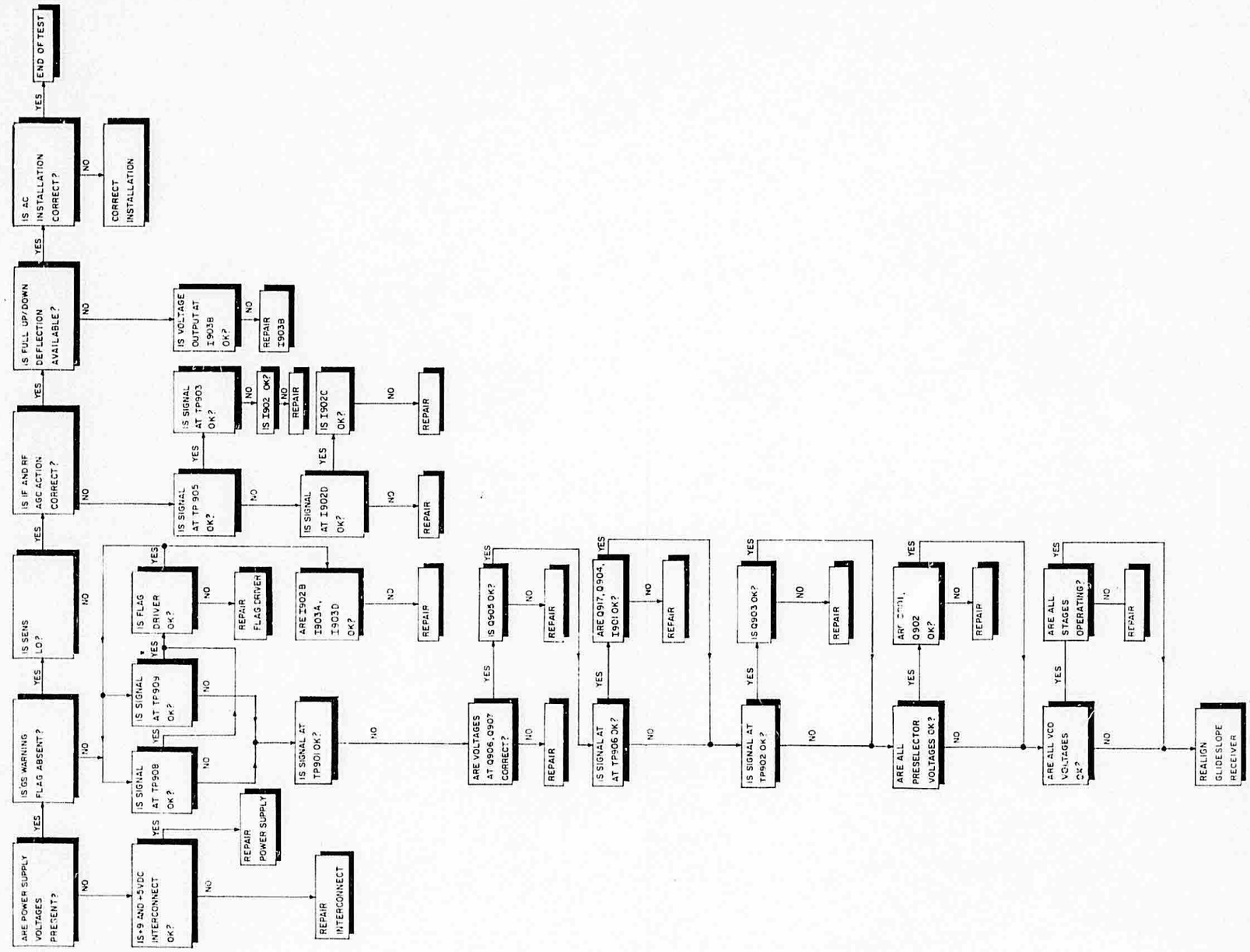

FIGURE 5-11 GLIDESLOPE TROUBLESHOOTING FLOWCHART
(Dwg. No. 696-2611-00, R-0)

ALSO SEE THIS PAGE AS UPPER/LOWER (NEXT)

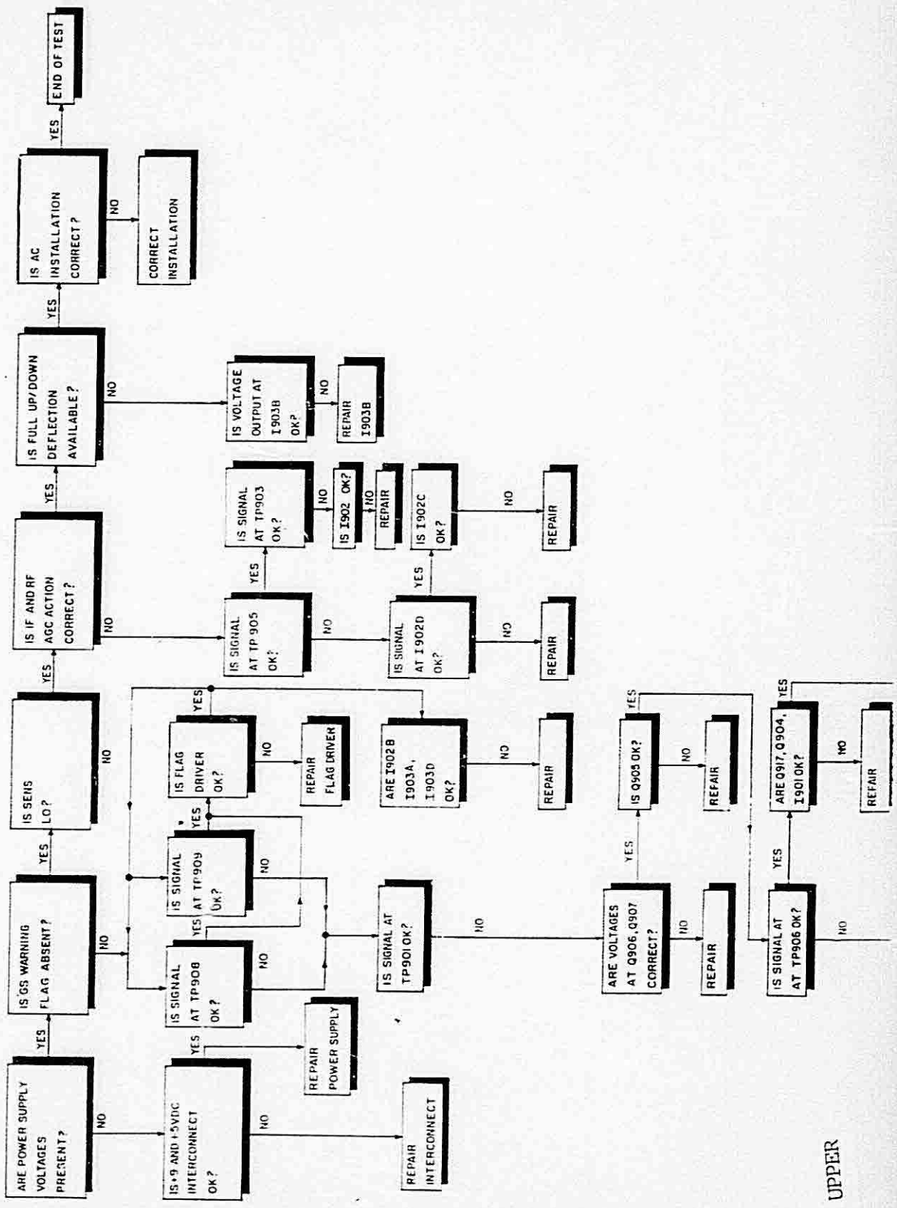

UPPER

FIGURE 5-11 GLIDESLOPE TROUBLESHOOTING FLOWCHART
(Dwg. No. 696-2611-00, R-0)

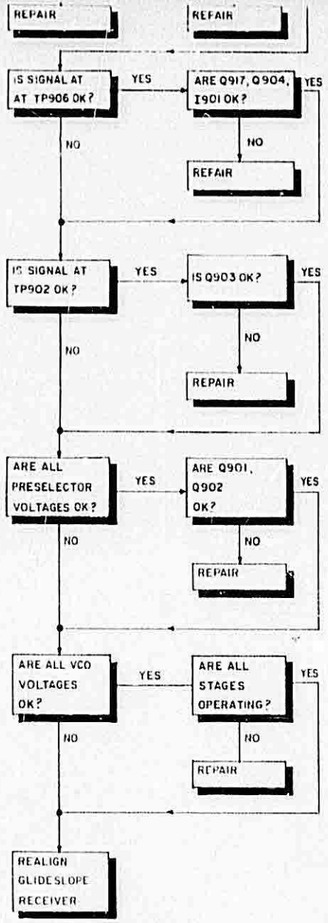
REPAIR
REPAIR
IS SIGNAL AT AT TP906 OK?
YES
ARE Q917, Q904, I901 OK?
YES
NO
NO
REPAIR
IS SIGNAL AT TP902 OK?
YES
IS Q903 OK?
YES
NO
NO
REPAIR
ARE ALL PRESELECTOR VOLTAGES OK?
YES
ARE Q901, Q902 OK?
YES
NO
NO
REPAIR
ARE ALL VCO VOLTAGES OK?
YES
ARE ALL STAGES OPERATING?
YES
NO
NO
REPAIR
REALIGN GLIDESLOPE RECEIVER

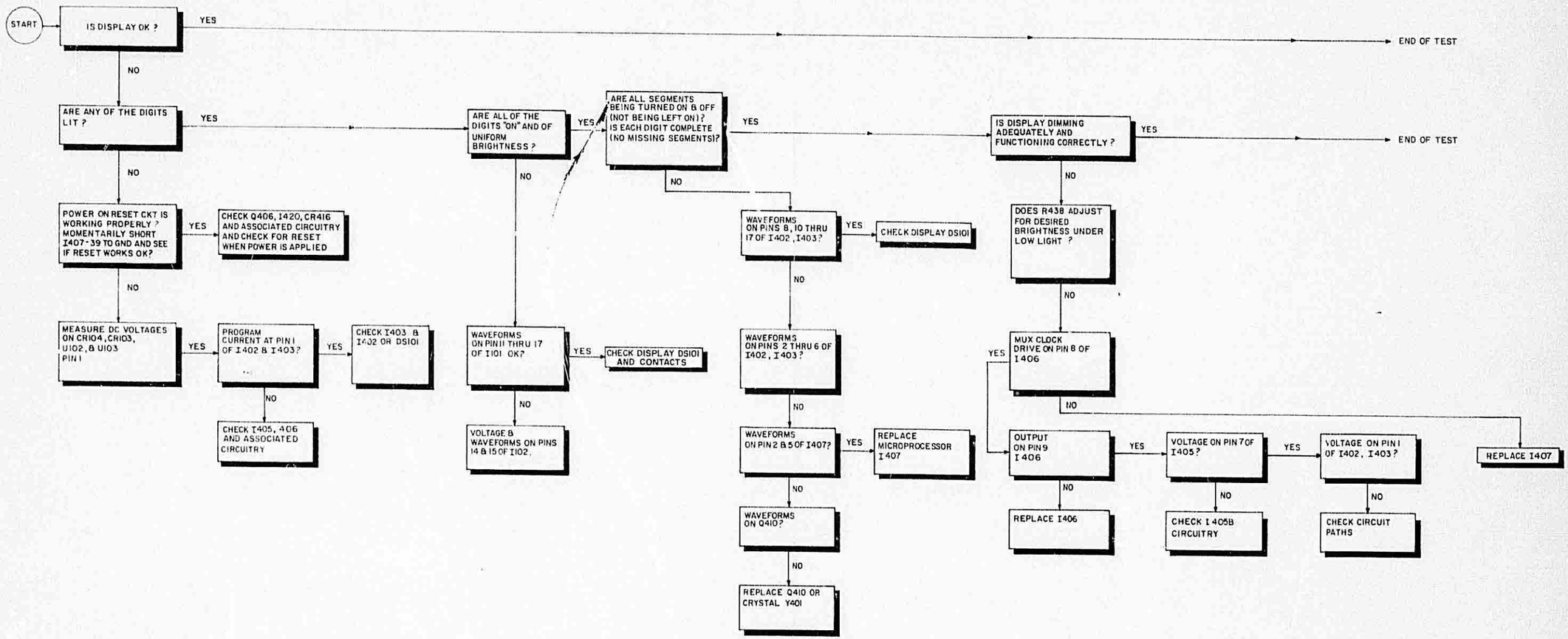

FIGURE 5-12 DISPLAY TROUBLESHOOTING FLOWCHART
(Dwg. No. 696-2612-00, R-0)

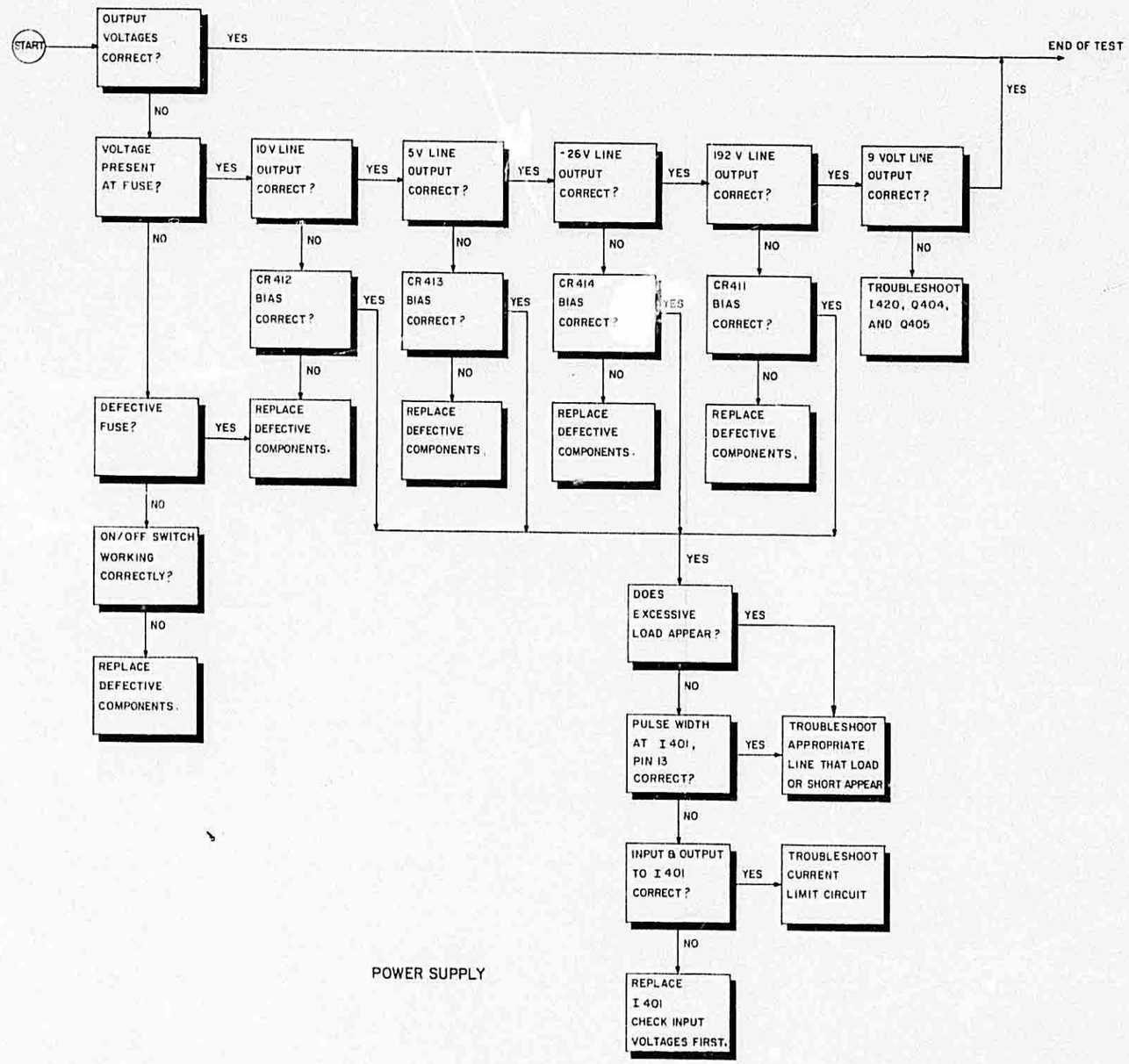

POWER SUPPLY

FIGURE 5-13 POWER SUPPLY TROUBLESHOOTING FLOWCHART
(Dwg. No. 696-2613-00, R-0)

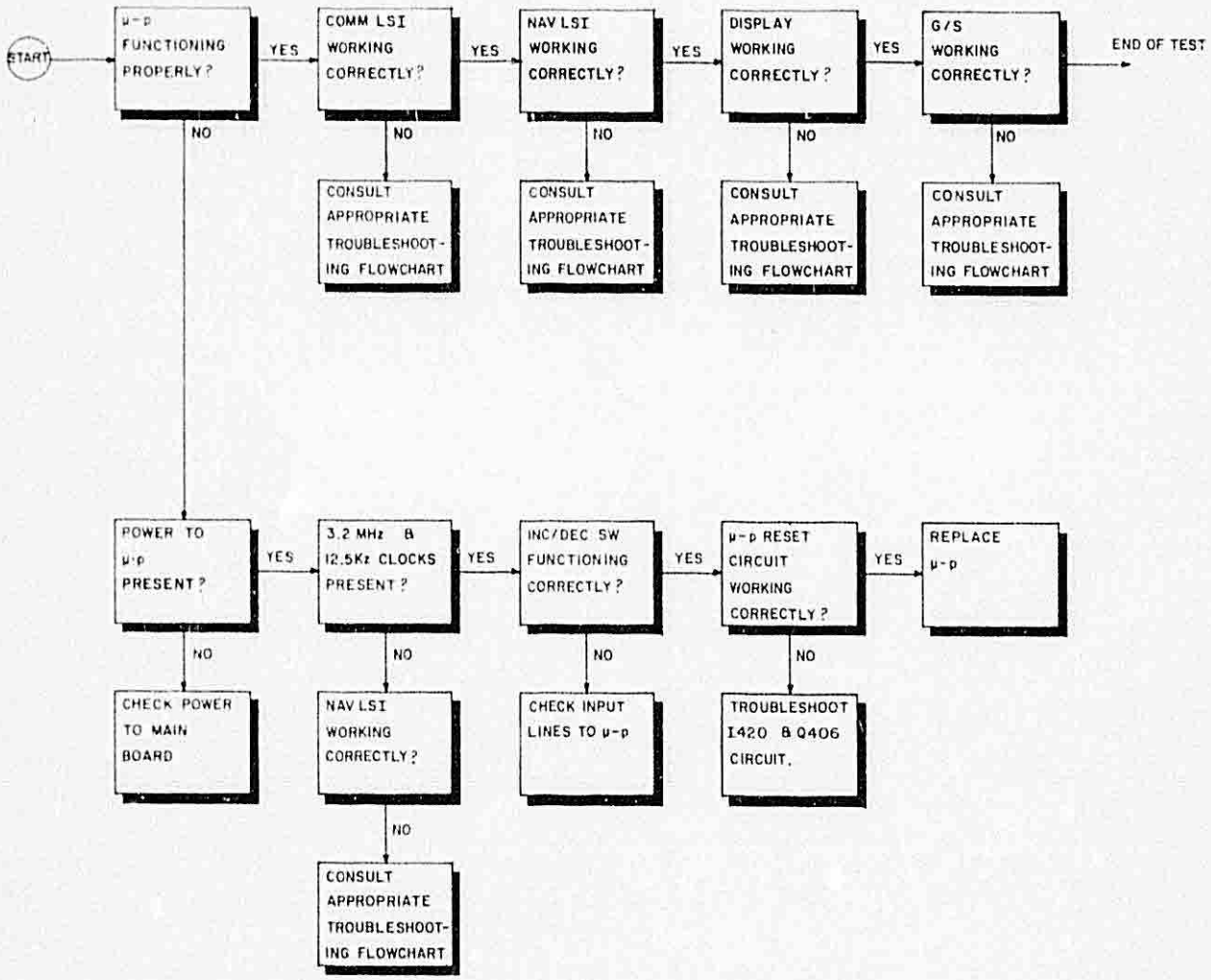

μ-p

FIGURE 5-14 MICROPROCESSOR TROUBLESHOOTING FLOWCHART

CHAPTER

06

SECTION VI

ILLUSTRATED PARTS LIST

INTRODUCTION

This Illustrated Parts List (IPL) provides for the proper identification of replacement parts. Individual Bills of Material (BOM) within this IPL are arranged in numerical order by BOM number. Each BOM is followed by the applicable Assembly Drawing and Schematic Diagram for that assembly. When a BOM includes one or more subassemblies, the BOM's for each subassembly, followed by their applicable Assembly Drawings and Schematic Diagrams will follow. Parts identified in this IPL by BENDIX/KING Part Number (P/N) meet design specifications for this equipment and are the recommended replacement parts. Warranty information concerning BENDIX/KING replacement parts is contained in Service Memo #1, P/N 600-08001-00XX.

BILL OF MATERIAL DESCRIPTION

This section describes the various items that can appear on a Bill of Material. A sample BOM is included in this section as Figure 6-1.

1. BOM Number

   The Bill of Material Number appears at the top of the BOM as a 12-digit number which is also the BENDIX/KING Part Number for the assembly. Units in production before 1/1/89 will have a 9-digit number (066-XXXX-XX) for a part number, although, subassemblies will have 12-digit numbers. The BOM Number is followed by the revision level and the description of the assembly for which the BOM applies.

2. Symbol Column

   This column contains the Reference Designators of the electrical components of the assembly. Mechanical parts such as nuts, bolts, and machined pieces are not assigned Reference Designators. The Reference Designator consists of a letter abbreviation which indicates the type of component followed by the number assigned to that part (C101, Q101, etc). Common Reference Designator abbreviations are listed below.

B	Motor or Synchro	I	Integrated Circuit	RT	Thermistor
C	Capacitor	J	Jack	S	Switch
CJ	Circuit Jumper	K	Relay	T	Transformer
CR	Diode	L	Inductor	TP	Test Point
DS	Lamp	M	Meter	U	Resistor/Capacitor Network/IC
E	Connection Point	P	Plug	V	Photocell/Vacuum Tube
F	Fuse	Q	Transistor	WG	Waveguide
FL	Filter	R	Resistor	Y	Crystal

3. Part Number Column

   This column contains the BENDIX/KING Part Number for each part. Special purpose 999-09999-00XX series part numbers may appear in the BOM and are described below.

   A. CR401 999-09999-0096 RESERVED

   The Reference Designator CR 401 has been reserved for future use and the assembly does not currently include a CR401.

   B. CR401 999-09999-0097 SEE NEXT ASSEMBLY

   CR401 is a part of the electrical circuit, but due to assembly or testing requirements is actually part of a different assembly.

   C. CR401 999-09999-0098 NOT USED

   The Reference Designator CR401 is available for future assignment and the assembly does not currently include a CR 401.

   D. CR401 999-09999-0099 DO NOT USE

   The Reference Designator CR401 has been previously used for this assembly and later deleted and it may not be reassigned on this assembly.

   E. I401 999-09999-0090 REF SOFTWARE SET

   I401 is a programmed memory device. Refer to Section 8, Software Documentation in this introduction for a description of the software documentation system being used for the publication of this manual.

BOM NUMBER

200-01614-0000 REV 31 AUDIO CONT BD ASSY KAA 455
200-01614-0099 REV 13 COMMON B/M KAA 455

ASSEMBLY VERSION

SYMBOL		PART NUMBER	DESCRIPTION	A	UM	0000	0099
		008-00011-0001	TERM SPLIT TURR		EA	.	6.00
		030-02174-0000	PIN CONT		EA	.	92.00
		047-03369-0001	HEAT SINK W/NUT		EA	.	2.00
		089-08025-0030	WSHR FLT STD #4		EA	.	3.00
		090-00307-0000	HEAT SINK FOR TO-5		EA	.	2.00
		091-00186-0000	INSUL XSTR		EA	.	5.00
		150-00004-0010	TUBING TFLN 22AWG		IN	.	1.20
		200-01614-0099	COMMON B/M	A	EA	1.00	.
C	101	096-01030-0002	CAP TN 1UF 20% 35V		EA	.	1.00
C	102	096-01030-0002	CAP TN 1UF 20% 35V		EA	.	1.00
C	103	096-01030-0002	CAP TN 1UF 20% 35V		EA	.	1.00
C	104	096-01030-0002	CAP TN 1UF 20% 35V		EA	.	1.00
C	105	096-01030-0002	CAP TN 1UF 20% 35V		EA	.	1.00
C	106	096-01030-0002	CAP TN 1UF 20% 35V		EA	.	1.00
C	107	096-01030-0002	CAP TN 1UF 20% 35V		EA	.	1.00
C	108	096-01030-0002	CAP TN 1UF 20% 35V		EA	.	1.00
C	109	096-01030-0002	CAP TN 1UF 20% 35V		EA	.	1.00
C	110	096-01030-0002	CAP TN 1UF 20% 35V		EA	.	1.00
C	111	096-01030-0002	CAP TN 1UF 20% 35V		EA	.	1.00
C	112	096-01030-0002	CAP TN 1UF 20% 35V		EA	.	1.00
C	113	096-01030-0002	CAP TN 1UF 20% 35V		EA	.	1.00
C	114	096-01030-0002	CAP TN 1UF 20% 35V		EA	.	1.00
C	115	096-01030-0002	CAP TN 1UF 20% 35V		EA	.	1.00
C	116	096-01030-0002	CAP TN 1UF 20% 35V		EA	.	1.00
C	117	096-01030-0002	CAP TN 1UF 20% 35V		EA	.	1.00
C	118	096-01030-0002	CAP TN 1UF 20% 35V		EA	.	1.00
C	119	096-01030-0002	CAP TN 1UF 20% 35V		EA	.	1.00
C	120	096-01030-0002	CAP TN 1UF 20% 35V		EA	.	1.00
C	121	096-01030-0002	CAP TN 1UF 20% 35V		EA	.	1.00
C	122	096-01030-0002	CAP TN 1UF 20% 35V		EA	.	1.00
C	123	096-01030-0002	CAP TN 1UF 20% 35V		EA	1.00	.
C	124	096-01030-0002	CAP TN 1UF 20% 35V		EA	1.00	.
C	125	096-01030-0002	CAP TN 1UF 20% 35V		EA	.	1.00
C	126	096-01030-0002	CAP TN 1UF 20% 35V		EA	.	1.00
C	127	096-01030-0002	CAP TN 1UF 20% 35V		EA	.	1.00
C	128	096-01030-0002	CAP TN 1UF 20% 35V		EA	.	1.00

UNIT OF MEASURE

REFERENCE DESIGNATOR

QUANTITY

PART NUMBER

DESCRIPTION

FIGURE 6-1 TYPICAL BILL OF MATERIAL

4. Description Column

This column contains the description of the parts used in the assembly. Common abbreviations which may appear in this column are listed below.

AL	Aluminum	MY	Mylar
ASSY	Assembly	PC	Polycarbonate
BIFLR	Bifilar	PF	Precision Film
BOM	Bill of Material	PP	Paper
CC	Carbon Composite	PS	Polystrene
CF	Carbon Film	QW	Quarter Watt
CH	Choke	RES	Resistor
CAP	Capacitor	S	Silicon
CR	Ceramic	SCR	Screw
DC	Disc Ceramic	SM	Silver Mica
DIO	Diode	STDF	Standoff
EL	Electrolytic	SW	Switch
EW	Eighth Watt	TERM	Terminal
FC	Fixed Composition	TN	Tantalum
FERR	Ferrite	TST PT	Test Point
FLTR	Filter	TW	Tenth Watt
FT	Feedthru	VA	Variable
HV	High Voltage	WW	Wire Wound
HW	Half Watt	XFMR	Transformer
IC	Integrated Circuit	XSTR	Transistor
MC	Monolithic Ceramic	XTAL	Crystal

5. Assembly (A) Column

The presence of an "A" in this column indicates that the part indicated is an assembly. If the P/N and description reads "200-0XXXX-0099 COMMON BOM," the parts for that assembly are included in the same BOM. The parts breakdown for an assembly with any other part number will be found in the BOM with the same number.

6. Unit of Measure (UM) Column

This column indicates the Unit of Measure for each part. Common abbreviations found in this column and their meaning are listed below.

EA	Each
FT	Foot
AR	As Required
RF	For Reference Only
IN	Inch

7. Quantity and Flavor Columns

Individual flavors of an assembly are identified by the last four digits of the P/N. Part quantities for each flavor will be indicated under headings numbered 0000 through 0099 as required. The parts indicated in the 0098 or 0099 Column are common to other flavors of the assembly as indicated and are considered to be the Common Bill of Material for the assembly.

8. Software Documentation

The documentation of software involves the use of several unique types of part numbers. The following subsections list these part numbers with their description. In some cases, some specific versions of hardware must be used with specific versions of software. The hardware/software configuration diagrams in Appendix S provide a method to coordinate hardware with software versions and revision levels. The unit designator and part numbers are listed in the top box. One level down from that are a box for the 206-type system software BOM number and boxes for the BOM numbers for all other hardware assemblies that do not contain any software. Under the system software box are boxes containing 205-type BOM's for assemblies which use software. Below these top BOM boxes are two boxes. One box shows the hardware BOM number and the other contains a list of circuit designators and part numbers of individual integrated circuits used on the circuit board.

A. General Information

The last four digits of all software related P/N's, designated in the following text as -00RN, indicate the revision number or level of the related software. This number is incremented with each revision of software. For example, -0000 is revision 0, -0001 is revision 1, and so on. When ordering specific integrated circuits or devices, the applicable 122-0XXXX-00RN P/N is used. When ordering a circuit board which contains software, the applicable 205-0XXXX-00RN P/N is used. The 206-0XXXX-00RN BOM is found immediately following the top BOM for the unit. The organization of the manual for individual circuit boards or assemblies containing software will have the 205-0XXXX-00RN BOM followed by the 125-0XXXX-00RN BOM, followed by the 200-0XXXX-00XX BOM for the particular circuit board or assembly. Applicable assembly drawings and schematic diagrams will then follow in order.

CAUTION

SPECIAL ATTENTION MUST BE GIVEN TO ORDERING THE CORRECT REVISION NUMBER (-00RN) OF ANY PARTS.

B. 206-0XXXX-00RN BENDIX/KING Part Numbers

This number is found in the top BOM for the unit along with any 200-0XXXX-00XX BOM's for circuit boards or assemblies used in the unit that do not contain software. The 206-0XXXX-00RN part number is used to list all of the 205-0XXXX-00RN circuit board P/N's used in a particular unit. Also listed is a 057-03284-00RN P/N which is a software identification tag that is placed on the outside of the unit. The tag displays a two digit number which corresponds to the -RN part of the 206-0XXXX-00RN P/N. This number is also referred to as the software revision level of the unit. The software identification tag is illustrated below.

SW ID
00

C. 205-0XXXX-00RN BENDIX/KING Part Numbers

A 205-0XXXX-00RN P/N is used as a top BOM for a circuit board or assembly which contains programmed devices. This BOM lists all 125-0XXXX-00RN P/N's and a 200-0XXXX-00XX hardware BOM for an individual circuit board or assembly. Also listed on this BOM are two 057-type P/N's which form an identification tag which is attached to the circuit board. The 057-03531-00XX and 057-050XX-00XX P/N's are the 205-0XXXX part of the label and the 057-02241-00RN P/N is the -00RN part of the label. The -00RN part of the P/N for both the 205-0XXXX-00RN and the 057-02241-00RN P/N's is incremented whenever the revision number of any one or more of the 125-0XXXX-00RN P/N's is incremented. This means that the -00RN part of the P/N's for the 057-02241-00RN and the 205-0XXXX-00RN will be the same. A circuit board identification tag is illustrated below.

205-06616-	0000

D. 999-09999-0090 REF SOFTWARE SET...SEE APPENDIX S

This number is found on 200-0XXXX-00XX hardware BOM's as the part number for each of the integrated circuits or other devices containing software. Refer to Appendix S to determine the correct P/N for ordering the correct programmed device. You will need to know the part number of and the software revision level of the unit. Appendix S contains block diagrams for documented software/hardware configurations.

E. 125-0XXXX-00RN BENDIX/KING Part Numbers

The 125-0XXXX-00RN P/N is a BOM which lists all the 122-0XXXX-00RN programmed devices in a software set for a given circuit board. There may be only one 122-0XXXX-00RN P/N listed or there may be several. Whenever the revision number (-00RN) of any one or more of the 122-0XXXX-00RN programmed devices is incremented in a new software release, the -00RN part of the 125-0XXXX-00RN P/N is also incremented. This 125-0XXXX-00RN BOM also indicates the "I" circuit designators used to identify the programmed devices on assembly drawings and schematic diagrams.

F. 122-0XXXX-00RN BENDIX/KING Part Numbers

The 122-0XXXX-00RN P/N is used to identify an individual integrated circuit or other device containing software.

069-01024-0000	NAV/COMM 14V	Rev 23	KX155
069-01024-0001	NAV/COM/GS 14V	Rev 25	KX155
069-01024-0002	NAV/COMM 14V 50KHZ	Rev 22	KX155
069-01024-0003	NAV/COM/GS14V50KHZ	Rev 25	KX155
069-01024-0004	NAV/COM 28V	Rev 21	KX155
069-01024-0005	NAV/COM/GS 28V	Rev 25	KX155
069-01024-0099	COMMON BOM	Rev 16	KX155

SYMBOL	CAS PART NBR	DESCRIPTION	[UOM]	-0000	-0001	-0002	-0003	-0004	-0005	-0099
_	012-01002-0000	TAPE .250W	[IN]	.	.	.	.	.	.	2
_	012-01005-0003	TAPE MYLAR .250 W	[IN]	.	.	.	.	.	.	0.394
_	012-01021-0006	TAPE ELEC 3/8 WD	[IN]	.	.	.	.	.	.	1
_	012-01038-0000	ADHESIVE DISC	[EA]	.	.	.	.	.	.	1
_	012-01127-0000	TAG COVER	[EA]	8	2	6	2	6	2	19
_	012-01154-0000	INSUL CNT SHLD	[EA]	.	.	.	.	.	.	1
_	012-01181-0000	TOP COVER INSUL	[EA]	.	1	.	1	.	1	.
_	012-01191-0000	TAG COVER	[EA]	.	.	.	.	.	.	1
_	016-01008-0004	GLYPTAL 7526 BL	[AR]	.	.	.	.	.	.	0
_	016-01053-0000	INS GRS MIL G3278	[AR]	.	.	.	.	.	.	0
_	016-01131-0000	CONTACT CEMENT	[AR]	.	.	.	.	.	.	0
_	025-00001-0003	WIRE 26 ORN	[IN]	.	.	.	.	.	.	14
_	025-00001-0004	WIRE 26 YEL	[IN]	.	.	.	.	.	.	8.5
_	025-00004-0000	WIRE 20 BLK	[IN]	.	.	.	.	.	.	3
_	025-00004-0005	WIRE 20 GRN	[IN]	1.2	1.2	1.2	1.2	.	.	1.7
_	025-00004-0010	WIRE 20 BK/WH	[IN]	0.8	0.8	0.8	0.8	.	.	5.6
_	025-00004-0011	WIRE 20 BN/WH	[IN]	.	.	.	.	.	.	2
_	025-00004-0013	WIRE 20 OR/WH	[IN]	.	.	.	.	.	.	2.1
_	025-00004-0015	WIRE 20 GN/WH	[IN]	.	.	.	.	.	.	1.7
_	025-00005-0002	WIRE 18 RED	[IN]	.	.	.	.	.	.	7
_	025-00005-0008	WIRE 18 GRY	[IN]	.	.	.	.	.	.	14
_	025-00005-0016	WIRE 18 BU/WH	[IN]	.	.	.	.	.	.	14
_	025-00024-0004	WIRE 22AWG YEL	[IN]	.	.	.	.	.	.	2.4
_	025-05012-0000	WIRE 2C SHD WHTBLK	[IN]	.	.	.	.	.	.	7
_	026-00001-0000	WIRE CU 26AWG TINNE	[AR]	.	.	.	.	.	.	0
_	026-00013-0000	WIRE COAX RG-178B/U	[IN]	.	.	.	.	.	.	63.12
_	026-00029-0000	WIRE CU 22AWG TINNE	[IN]	.	.	.	.	.	.	1.2
_	035-01361-0016	PROTECTIVE COVER	[EA]	.	.	.	.	.	.	1
_	047-04874-0001	MTG RACK	[EA]	.	.	.	.	.	.	1
_	047-04877-0001	CNTR SHLD	[EA]	.	.	.	.	.	.	1
_	047-04878-0003	BTM CVR W/F&H 28V	[EA]	.	.	.	.	.	.	1
_	047-04879-0001	TOP COVER	[EA]	.	.	.	.	.	.	1
_	047-05817-0000	RADIATION SHIELD	[EA]	.	1	.	1	.	1	.
_	057-02203-1000	S/N TAG FLVR BLK	[EA]	1	.	.	.	.	.	.

SYMBOL	CAS PART NBR	DESCRIPTION	[UOM]	-0000	-0001	-0002	-0003	-0004	-0005	-0099
-	057-02203-1001	S/N TAG FLVR BLK	[EA]	.	1	.	.	.	.	.
-	057-02203-1002	S/N TAG FLVR BLK	[EA]	.	.	1	.	.	.	.
-	057-02203-1003	S/N TAG FLVR BLK	[EA]	.	.	.	1	.	.	.
-	057-02203-1004	S/N TAG FLVR BLK	[EA]	.	.	.	.	1	.	.
-	057-02203-1005	S/N TAG FLVR BLK	[EA]	.	.	.	.	.	1	.
-	057-02305-0000	CNTR SHLD INFO DCL	[EA]	.	.	.	.	.	.	1
-	057-02311-0000	VOLTAGE TAG 14V	[EA]	1	1	1	1	.	.	.
-	057-02311-0001	VOLTAGE TAG 28V	[EA]	.	.	.	.	1	1	.
-	057-02312-0000	DECAL	[EA]	.	.	1	1	.	.	.
-	057-02313-0002	S/N TAG	[EA]	.	1	.	1	.	1	.
-	057-02313-0003	S/N TAG	[EA]	1	.	1	.	1	.	.
-	057-03187-0000	FCC LABEL	[EA]	.	.	.	.	.	.	1
-	069-01024-0099	COMMON BOM	[EA]	1	1	1	1	1	1	.
-	073-00404-0002	FRONT PANEL CSTG	[EA]	.	.	.	.	.	.	1
-	073-00456-0001	PC BD SPCR	[EA]	1	1	1	1	1	1	.
-	076-01055-0001	SPCR	[EA]	2	.	2	.	2	.	.
-	076-01146-0001	HEX SPACER .922	[EA]	.	1	.	1	.	1	.
-	076-01146-0002	HEX SPCR .970	[EA]	1	.	1	.	1	.	.
-	088-00863-0001	LENS	[EA]	.	.	.	.	.	.	2
-	089-02076-0030	NUT FLAT 4-40	[EA]	.	.	.	.	.	.	5
-	089-05432-0004	SCR FHP 2-56X1/4	[EA]	.	.	.	.	.	.	7
-	089-05436-0004	SCR FHP 4-40X1/4	[EA]	.	.	.	.	.	.	2
-	089-05436-0006	SCR FHP 4-40X3/8	[EA]	.	6	.	6	.	6	.
-	089-05878-0003	SCR PHP 4-40X3/16	[EA]	2	2	2	2	2	2	.
-	089-05878-0004	SCR PHP 4-40X1/4	[EA]	.	.	.	.	.	.	1
-	089-05899-0002	SCR PHP 2-56X1/8	[EA]	.	.	.	.	.	.	6
-	089-05903-0003	SCR PHP 4-40X3/16	[EA]	.	.	.	.	.	.	1
-	089-06123-0003	SCR PHP 4-40X3/16	[EA]	.	.	.	.	.	.	2
-	089-06368-0003	SCR FHP 4-40X3/16	[EA]	.	.	.	.	.	.	4
-	089-07050-0000	SCR FHP 4-40X7/16	[EA]	2	.	2	.	2	.	.
-	089-08109-0034	WSHR SPLT LK #4	[EA]	.	.	.	.	.	.	1
-	091-00109-0000	CABLE TIE .234	[EA]	.	.	.	.	.	.	7
-	150-00003-0010	TUBING TFLN 24AWG	[AR]	.	.	.	.	.	.	0
-	150-00049-0010	TUBING SHRINK WHT	[IN]	.	.	.	.	.	.	1
-	150-00103-0000	SLDR SLEEVE	[EA]	.	.	.	.	.	.	6
-	187-01018-0000	CUSHION RELAY	[EA]	.	.	.	.	.	.	2
-	195-00118-0000	S/N TAG KI-206	[EA]	1	1	1	1	.	.	.
-	195-00118-0001	S/N TAG OPTION	[EA]	.	.	.	.	1	1	.
-	200-02612-0000	MN CHAS KX155 14V	[EA]	1	1	1	1	.	.	.
-	200-02612-0001	MN CHAS KX 155 28V	[EA]	.	.	.	.	1	1	.
-	200-02613-0000	GLIDESLOPE	[EA]	.	1	.	1	.	1	.
-	200-02641-0000	R/T ASSY 14V	[EA]	1	1	.	.	.	.	.

SYMBOL	CAS PART NBR	DESCRIPTION	[UOM]	-0000	-0001	-0002	-0003	-0004	-0005	-0099
-	200-02641-0001	R/T ASSY 14V 50KHZ	[EA]	.	.	1	1	.	.	.
-	200-02641-0002	R-T ASSY 28V	[EA]	.	.	.	.	1	1	.
DS 101	037-00073-0000	DISPLAY KX 165	[EA]	.	.	.	.	.	.	1
L 817	013-00006-0001	FERR BEAD	[EA]	.	.	.	.	.	.	1
L 818	013-00006-0001	FERR BEAD	[EA]	.	.	.	.	.	.	1

069-01024-0006	NAV/COMM 28V 50KHZ	Rev 21	KX 155
069-01024-0007	NAV/COM/GS28V50KHZ	Rev 25	KX 155
069-01024-0008	NAV/COMM/AUD 14V	Rev 13	KX 155
069-01024-0009	NAV/COMM/AUD 28V	Rev 13	KX 155
069-01024-0010	NAV/COM/AUD/14V50K	Rev 13	KX 155
069-01024-0011	NAV/COM/AUD/28V50K	Rev 12	KX 155
069-01024-0099	COMMON BOM	Rev 16	KX 155

SYMBOL	CAS PART NBR	DESCRIPTION	[UOM]	-0006	-0007	-0008	-0009	-0010	-0011	-0099
-	012-01002-0000	TAPE .250W8	[IN]	.	.	.	.	.	.	2
-	012-01005-0003	TAPE MYLAR .250 W	[IN]	.	.	.	.	.	.	0.394
-	012-01021-0006	TAPE ELEC 3/8 WD	[IN]	.	.	.	.	.	.	1
-	012-01038-0000	ADHESIVE DISC	[EA]	.	.	.	.	.	.	1
-	012-01127-0000	TAG COVER	[EA]	6	2	4	4	4	4	19
-	012-01154-0000	INSUL CNT SHLD	[EA]	.	.	.	.	.	.	1
-	012-01181-0000	TOP COVER INSUL	[EA]	.	1	.	.	.	.	.
-	012-01181-0001	TOP COVER INSUL	[EA]	.	.	1	1	1	1	.
-	012-01191-0000	TAG COVER	[EA]	.	.	.	.	.	.	1
-	016-01008-0004	GLYPTAL 7526 BL	[AR]	.	.	.	.	.	.	0
-	016-01053-0000	INS GRS MIL G3278	[AR]	.	.	.	.	.	.	0
-	016-01131-0000	CONTACT CEMENT	[AR]	.	.	.	.	.	.	0
-	025-00001-0003	WIRE 26 ORN	[IN]	.	.	.	.	.	.	14
-	025-00001-0004	WIRE 26 YEL	[IN]	.	.	.	.	.	.	8.5
-	025-00004-0000	WIRE 20 BLK	[IN]	.	.	.	.	.	.	3
-	025-00004-0005	WIRE 20 GRN	[IN]	.	.	1.2	.	1.2	.	1.7
-	025-00004-0010	WIRE 20 BK/WH	[IN]	.	.	0.8	.	0.8	.	5.6
-	025-00004-0011	WIRE 20 BN/WH	[IN]	.	.	.	.	.	.	2
-	025-00004-0013	WIRE 20 OR/WH	[IN]	.	.	.	.	.	.	2.1
-	025-00004-0015	WIRE 20 GN/WH	[IN]	.	.	.	.	.	.	1.7
-	025-00005-0002	WIRE 18 RED	[IN]	.	.	.	.	.	.	7
-	025-00005-0008	WIRE 18 GRY	[IN]	.	.	.	.	.	.	14
-	025-00005-0016	WIRE 18 BU/WH	[IN]	.	.	.	.	.	.	14
-	025-00024-0004	WIRE 22AWG YEL	[IN]	.	.	.	.	.	.	2.4
-	025-05012-0000	WIRE 2C SHD WHTBLK	[IN]	.	.	.	.	.	.	7
-	026-00001-0000	WIRE CU 26AWG TINNE	[AR]	.	.	.	.	.	.	0
-	026-00013-0000	WIRE COAX RG-178B/U	[IN]	.	.	.	.	.	.	63.12
-	026-00029-0000	WIRE CU 22AWG TINNE	[IN]	.	.	.	.	.	.	1.2
-	035-01361-0016	PROTECTIVE COVER	[EA]	.	.	.	.	.	.	1
-	047-04874-0001	MTG RACK	[EA]	.	.	.	.	.	.	1
-	047-04877-0001	CNTR SHLD	[EA]	.	.	.	.	.	.	1
-	047-04878-0003	BTM CVR W/F&H 28V	[EA]	.	.	.	.	.	.	1
-	047-04879-0001	TOP COVER	[EA]	.	.	.	.	.	.	1
-	047-05817-0000	RADIATION SHIELD	[EA]	.	1	.	.	.	.	.

SYMBOL	CAS PART NBR	DESCRIPTION	[UOM]	-0006	-0007	-0008	-0009	-0010	-0011	-0099
-	057-02203-1006	S/N TAG FLVR BLK	[EA]	1	.	.	.	.	.	.
-	057-02203-1007	S/N TAG FLVR BLK	[EA]	.	1	.	.	.	.	.
-	057-02203-1008	S/N TAG FLVR BLK	[EA]	.	.	1	.	.	.	.
-	057-02203-1009	S/N TAG FLVR BLK	[EA]	.	.	.	1	.	.	.
-	057-02203-1010	S/N TAG FLVR BLK	[EA]	.	.	.	.	1	.	.
-	057-02203-1011	S/N TAG FLVR BLK	[EA]	.	.	.	.	.	1	.
-	057-02305-0000	CNTR SHLD INFO DCL	[EA]	.	.	.	.	.	.	1
-	057-02311-0000	VOLTAGE TAG 14V	[EA]	.	.	1	.	1	.	.
-	057-02311-0001	VOLTAGE TAG 28V	[EA]	1	1	.	1	.	1	.
-	057-02312-0000	DECAL	[EA]	1	1	.	.	1	1	.
-	057-02313-0002	S/N TAG	[EA]	.	1	.	.	.	.	.
-	057-02313-0003	S/N TAG	[EA]	1	.	.	.	.	.	.
-	057-02313-0004	S/N TAG	[EA]	.	.	1	1	1	1	.
-	057-03187-0000	FCC LABEL	[EA]	.	.	.	.	.	.	1
-	069-01024-0099	COMMON BOM	[EA]	1	1	1	1	1	1	.
-	073-00404-0002	FRONT PANEL CSTG	[EA]	.	.	.	.	.	.	1
-	073-00456-0000	PC BD SPCR	[EA]	.	.	1	1	1	1	.
-	073-00456-0001	PC BD SPCR	[EA]	1	1	.	.	.	.	.
-	076-01055-0001	SPCR	[EA]	2	.	2	2	2	2	.
-	076-01146-0000	HEX SPACER .860	[EA]	.	.	1	1	1	1	.
-	076-01146-0001	HEX SPACER .922	[EA]	.	1	.	.	.	.	.
-	076-01146-0002	HEX SPCR .970	[EA]	1	.	.	.	.	.	.
-	088-00863-0001	LENS	[EA]	.	.	.	.	.	.	2
-	089-02076-0030	NUT FLAT 4-40	[EA]	.	.	2	2	2	2	5
-	089-05432-0004	SCR FHP 2-56X1/4	[EA]	.	.	.	.	.	.	7
-	089-05436-0004	SCR FHP 4-40X1/4	[EA]	.	.	.	.	.	.	2
-	089-05436-0006	SCR FHP 4-40X3/8	[EA]	.	6	2	2	2	2	.
-	089-05878-0003	SCR PHP 4-40X3/16	[EA]	2	2	2	2	2	2	.
-	089-05878-0004	SCR PHP 4-40X1/4	[EA]	.	.	.	.	.	.	1
-	089-05899-0002	SCR PHP 2-56X1/8	[EA]	.	.	.	.	.	.	6
-	089-05903-0003	SCR PHP 4-40X3/16	[EA]	.	.	.	.	.	.	1
-	089-06123-0003	SCR PHP 4-40X3/16	[EA]	.	.	.	.	.	.	2
-	089-06368-0003	SCR FHP 4-40X3/16	[EA]	.	.	.	.	.	.	4
-	089-07050-0000	SCR FHP 4-40X7/16	[EA]	2	.	2	2	2	2	.
-	089-08109-0034	WSHR SPLT LK #4	[EA]	.	.	2	2	2	2	1
-	091-00109-0000	CABLE TIE .234	[EA]	.	.	.	.	.	.	7
-	150-00003-0010	TUBING TFLN 24AWG	[AR]	.	.	.	.	.	.	0
-	150-00049-0010	TUBING SHRINK WHT	[IN]	.	.	.	.	.	.	1
-	150-00103-0000	SLDR SLEEVE	[EA]	.	.	.	.	.	.	6
-	187-01018-0000	CUSHION RELAY	[EA]	.	.	.	.	.	.	2
-	195-00118-0000	S/N TAG KI-206	[EA]	.	.	1	.	1	.	.
-	195-00118-0001	S/N TAG OPTION	[EA]	1	1	.	1	.	1	.

SYMBOL	CAS PART NBR	DESCRIPTION	[UOM]	-0006	-0007	-0008	-0009	-0010	-0011	-0099
_	200-02612-0000	MN CHAS KX155 14V	[EA]	.	.	1	.	1	.	.
_	200-02612-0001	MN CHAS KX 155 28V	[EA]	1	1	.	1	.	1	.
_	200-02613-0000	GLIDESLOPE	[EA]	.	1	.	.	.	.	.
_	200-02641-0000	R/T ASSY 14V	[EA]	.	.	1	.	.	.	.
_	200-02641-0001	R/T ASSY 14V 50KHZ	[EA]	.	.	.	.	1	.	.
_	200-02641-0002	R-T ASSY 28V	[EA]	.	.	.	1	.	.	.
_	200-02641-0003	R-T ASSY 28V 50KHZ	[EA]	1	1	.	.	.	1	.
_	200-06374-0000	ISLN & AUDIO AMP	[EA]	.	.	1	1	1	1	.
DS 101	037-00073-0000	DISPLAY KX 165	[EA]	.	.	.	.	.	.	1
L 817	013-00006-0001	FERR BEAD	[EA]	.	.	.	.	.	.	1
L 818	013-00006-0001	FERR BEAD	[EA]	.	.	.	.	.	.	1

069-01024-0012	NAV/COM/GS/AUD/14V	Rev 17	KX 155
069-01024-0013	NAV/COM/GS/AUD/28V	Rev 19	KX 155
069-01024-0020	NAV/COM28V50KHZNVG	Rev 4	KX 155
069-01024-0030	KX155 NAV/COM	Rev 5	KX 155
069-01024-0031	KX155 NAV/COM	Rev 6	KX 155
069-01024-0032	KX155 NAV/COM	Rev 5	KX 155
069-01024-0099	COMMON BOM	Rev 16	KX 155

SYMBOL	CAS PART NBR	DESCRIPTION	[UOM]	-0012	-0013	-0020	-0030	-0031	-0032	-0099
_	012-01002-0000	TAPE .250W	[IN]	.	.	.	.	.	.	2
_	012-01005-0003	TAPE MYLAR .250 W	[IN]	.	.	.	.	.	.	0.394
_	012-01021-0006	TAPE ELEC 3/8 WD	[IN]	.	.	.	.	.	.	1
_	012-01038-0000	ADHESIVE DISC	[EA]	.	.	.	.	.	.	1
_	012-01127-0000	TAG COVER	[EA]	.	.	8	6	2	6	19
_	012-01154-0000	INSUL CNT SHLD	[EA]	.	.	.	.	.	.	1
_	012-01181-0000	TOP COVER INSUL	[EA]	.	.	.	.	1	.	.
_	012-01181-0001	TOP COVER INSUL	[EA]	1	1	.	.	.	.	.
_	012-01191-0000	TAG COVER	[EA]	.	.	.	.	.	.	1
_	016-01008-0004	GLYPTAL 7526 BL	[AR]	.	.	.	.	.	.	0
_	016-01053-0000	INS GRS MIL G3278	[AR]	.	.	.	.	.	.	0
_	016-01131-0000	CONTACT CEMENT	[AR]	.	.	.	.	.	.	0
_	025-00001-0003	WIRE 26 ORN	[IN]	.	.	.	.	.	.	14
_	025-00001-0004	WIRE 26 YEL	[IN]	.	.	.	.	.	.	8.5
_	025-00004-0000	WIRE 20 BLK	[IN]	.	.	.	.	.	.	3
_	025-00004-0005	WIRE 20 GRN	[IN]	1.2	.	.	1.2	1.2	1.2	1.7
_	025-00004-0010	WIRE 20 BK/WH	[IN]	0.8	.	.	0.8	0.8	0.8	5.6
_	025-00004-0011	WIRE 20 BN/WH	[IN]	.	.	.	.	.	.	2
_	025-00004-0013	WIRE 20 OR/WH	[IN]	.	.	.	.	.	.	2.1
_	025-00004-0015	WIRE 20 GN/WH	[IN]	.	.	.	.	.	.	1.7
_	025-00005-0002	WIRE 18 RED	[IN]	.	.	.	.	.	.	7
_	025-00005-0008	WIRE 18 GRY	[IN]	.	.	.	.	.	.	14
_	025-00005-0016	WIRE 18 BU/WH	[IN]	.	.	.	.	.	.	14
_	025-00024-0004	WIRE 22AWG YEL	[IN]	.	.	.	.	.	.	2.4
_	025-05012-0000	WIRE 2C SHD WHTBLK	[IN]	.	.	.	.	.	.	7
_	026-00001-0000	WIRE CU 26AWG TINNE	[AR]	.	.	.	.	.	.	0
_	026-00013-0000	WIRE COAX RG-178B/U	[IN]	18	18	.	.	.	.	63.12
_	026-00029-0000	WIRE CU 22AWG TINNE	[IN]	.	.	.	.	.	.	1.2
_	035-01361-0016	PROTECTIVE COVER	[EA]	.	.	.	.	.	.	1
_	047-04874-0001	MTG RACK	[EA]	.	.	.	.	.	.	1
_	047-04877-0001	CNTR SHLD	[EA]	.	.	.	.	.	.	1
_	047-04878-0003	BTM CVR W/F&H 28V	[EA]	.	.	.	.	.	.	1
_	047-04879-0001	TOP COVER	[EA]	.	.	.	.	.	.	1
_	047-05817-0000	RADIATION SHIELD	[EA]	1	1	.	.	1	.	

SYMBOL	CAS PART NBR	DESCRIPTION	[UOM]	-0012	-0013	-0020	-0030	-0031	-0032	-0099
-	057-02203-1012	S/N TAG FLVR BLK	[EA]	1	.	.	.	.	.	.
-	057-02203-1013	S/N TAG FLVR BLK	[EA]	.	1	.	.	.	.	.
-	057-02203-1020	S/N TAG FLVR BLK	[EA]	.	.	1	.	.	.	.
-	057-02203-1030	S/N TAG FLVR BLK	[EA]	.	.	.	1	.	.	.
-	057-02203-1031	S/N TAG FLVR BLK	[EA]	.	.	.	.	1	.	.
-	057-02203-1032	S/N TAG FLVR BLK	[EA]	.	.	.	.	.	1	.
-	057-02305-0000	CNTR SHLD INFO DCL	[EA]	.	.	.	.	.	.	1
-	057-02311-0000	VOLTAGE TAG 14V	[EA]	1	.	.	1	1	1	.
-	057-02311-0001	VOLTAGE TAG 28V	[EA]	.	1	1	.	.	.	.
-	057-02312-0000	DECAL	[EA]	.	.	1	.	.	1	.
-	057-02313-0003	S/N TAG	[EA]	.	.	1	.	.	.	.
-	057-02313-0005	S/N TAG	[EA]	1	1	.	.	.	.	.
-	057-02313-0102	S/N TAG KX155	[EA]	.	.	.	.	1	.	.
-	057-02313-0103	S/N TAG KX155	[EA]	.	.	.	1	.	1	.
-	057-03187-0000	FCC LABEL	[EA]	.	.	.	.	.	.	1
-	069-01024-0099	COMMON BOM	[EA]	1	1	1	1	1	1	.
-	073-00404-0002	FRONT PANEL CSTG	[EA]	.	.	.	.	.	.	1
-	073-00456-0000	PC BD SPCR	[EA]	1	1	.	.	.	.	.
-	073-00456-0001	PC BD SPCR	[EA]	.	.	1	1	1	1	.
-	076-01055-0001	SPCR	[EA]	.	.	.	2	.	2	.
-	076-01146-0000	HEX SPACER .860	[EA]	1	1	.	.	.	.	.
-	076-01146-0001	HEX SPACER .922	[EA]	.	.	.	.	1	.	.
-	076-01146-0002	HEX SPCR .970	[EA]	.	.	1	1	.	1	.
-	088-00863-0001	LENS	[EA]	.	.	.	.	.	.	2
-	089-02076-0030	NUT FLAT 4-40	[EA]	2	2	.	.	.	.	5
-	089-05432-0004	SCR FHP 2-56X1/4	[EA]	.	.	.	.	.	.	7
-	089-05436-0004	SCR FHP 4-40X1/4	[EA]	.	.	.	.	.	.	2
-	089-05436-0006	SCR FHP 4-40X3/8	[EA]	8	8	.	.	6	.	.
-	089-05878-0003	SCR PHP 4-40X3/16	[EA]	2	2	2	2	2	2	.
-	089-05878-0004	SCR PHP 4-40X1/4	[EA]	.	.	.	.	.	.	1
-	089-05899-0002	SCR PHP 2-56X1/8	[EA]	.	.	.	.	.	.	6
-	089-05903-0003	SCR PHP 4-40X3/16	[EA]	.	.	.	.	.	.	1
-	089-06123-0003	SCR PHP 4-40X3/16	[EA]	.	.	.	.	.	.	2
-	089-06368-0003	SCR FHP 4-40X3/16	[EA]	.	.	.	.	.	.	4
-	089-07050-0000	SCR FHP 4-40X7/16	[EA]	.	.	.	2	.	2	.
-	089-08109-0034	WSHR SPLT LK #4	[EA]	2	2	.	.	.	.	1
-	091-00109-0000	CABLE TIE .234	[EA]	.	.	.	.	.	.	7
-	150-00003-0010	TUBING TFLN 24AWG	[AR]	.	.	.	.	.	.	0
-	150-00049-0010	TUBING SHRINK WHT	[IN]	.	.	.	.	.	.	1
-	150-00103-0000	SLDR SLEEVE	[EA]	2	2	.	.	.	.	6
-	155-02026-0016	JMPR CA ASSY 8P	[EA]	1	1	.	.	.	.	.
-	187-01016-0000	CUSHION RELAY	[EA]	.	.	.	.	.	.	2

SYMBOL	CAS PART NBR	DESCRIPTION	[UOM]	-0012	-0013	-0020	-0030	-0031	-0032	-0099
-	195-00118-0000	S/N TAG KI-206	[EA]	1	.	.	.	.	.	.
-	195-00118-0001	S/N TAG OPTION	[EA]	.	1	1	.	.	.	.
-	195-00125-0000	S/N TAG KI-206	[EA]	.	.	.	1	1	1	.
-	200-02612-0000	MN CHAS KX155 14V	[EA]	1	.	.	.	.	.	.
-	200-02612-0001	MN CHAS KX 155 28V	[EA]	.	1	.	.	.	.	.
-	200-02612-0004	MN CHAS KX155 28V	[EA]	.	.	1	.	.	.	.
-	200-02612-0005	MAIN CHASSIS 14V	[EA]	.	.	.	1	1	1	.
-	200-02613-0000	GLIDESLOPE	[EA]	1	1	.	.	1	.	.
-	200-02641-0000	R/T ASSY 14V	[EA]	1	.	.	1	1	.	.
-	200-02641-0001	R/T ASSY 14V 50KHZ	[EA]	.	.	.	.	.	1	.
-	200-02641-0002	R-T ASSY 28V	[EA]	.	1	.	.	.	.	.
-	200-02641-0003	R-T ASSY 28V 50KHZ	[EA]	.	.	1	.	.	.	.
-	200-06374-0000	ISLN & AUDIO AMP	[EA]	1	1	.	.	.	.	.
DS 101	037-00073-0000	DISPLAY KX 165	[EA]	.	.	.	.	.	.	1
L 817	013-00006-0001	FERR BEAD	[EA]	.	.	.	.	.	.	1
L 818	013-00006-0001	FERR BEAD	[EA]	.	.	.	.	.	.	1

069-01024-0033	KX155 NAV/COM	Rev 6	KX 155
069-01024-0034	KX155 NAV/COM	Rev 9	KX 155
069-01024-0035	KX155 NAV/COM	Rev 6	KX 155
069-01024-0036	KX155 NAV/COM	Rev 5	KX 155
069-01024-0037	KX155 NAV/COM	Rev 6	KX 155
069-01024-0038	KX155 NAV/COM	Rev AA	KX 155
069-01024-0099	COMMON BOM	Rev 16	KX 155

SYMBOL	CAS PART NBR	DESCRIPTION	[UOM]	-0033	-0034	-0035	-0036	-0037	-0038	-0099
-	012-01002-0000	TAPE .250W	[IN]	.	.	.	.	.	.	2
-	012-01005-0003	TAPE MYLAR .250 W	[IN]	.	.	.	.	.	.	0.394
-	012-01021-0006	TAPE ELEC 3/8 WD	[IN]	.	.	.	.	.	.	1
-	012-01038-0000	ADHESIVE DISC	[EA]	.	.	.	.	.	.	1
-	012-01127-0000	TAG COVER	[EA]	2	6	2	6	2	4	19
-	012-01154-0000	INSUL CNT SHLD	[EA]	.	.	.	.	.	.	1
-	012-01181-0000	TOP COVER INSUL	[EA]	1	.	1	.	1	.	.
-	012-01181-0001	TOP COVER INSUL	[EA]	.	.	.	.	.	1	.
-	012-01191-0000	TAG COVER	[EA]	.	.	.	.	.	.	1
-	016-01008-0004	GLYPTAL 7526 BL	[AR]	.	.	.	.	.	.	0
-	016-01053-0000	INS GRS MIL G3278	[AR]	.	.	.	.	.	.	0
-	016-01131-0000	CONTACT CEMENT	[AR]	.	.	.	.	.	.	0
-	025-00001-0003	WIRE 26 ORN	[IN]	.	.	.	.	.	.	14
-	025-00001-0004	WIRE 26 YEL	[IN]	.	.	.	.	.	.	8.5
-	025-00004-0000	WIRE 20 BLK	[IN]	.	.	.	.	.	.	3
-	025-00004-0005	WIRE 20 GRN	[IN]	1.2	.	.	.	.	1.2	1.7
-	025-00004-0010	WIRE 20 BK/WH	[IN]	0.8	.	.	.	.	0.8	5.6
-	025-00004-0011	WIRE 20 BN/WH	[IN]	.	.	.	.	.	.	2
-	025-00004-0013	WIRE 20 OR/WH	[IN]	.	.	.	.	.	.	2.1
-	025-00004-0015	WIRE 20 GN/WH	[IN]	.	.	.	.	.	.	1.7
-	025-00005-0002	WIRE 18 RED	[IN]	.	.	.	.	.	.	7
-	025-00005-0008	WIRE 18 GRY	[IN]	.	.	.	.	.	.	14
-	025-00005-0016	WIRE 18 BU/WH	[IN]	.	.	.	.	.	.	14
-	025-00024-0004	WIRE 22AWG YEL	[IN]	.	.	.	.	.	.	2.4
-	025-05012-0000	WIRE 2C SHD WHTBLK	[IN]	.	.	.	.	.	.	7
-	026-00001-0000	WIRE CU 26AWG TINNE	[AR]	.	.	.	.	.	.	0
-	026-00013-0000	WIRE COAX RG-178B/U	[IN]	.	.	.	.	.	.	63.12
-	026-00029-0000	WIRE CU 22AWG TINNE	[IN]	.	.	.	.	.	.	1.2
-	035-01007-0020	CONN CVR NAS820-8	[EA]	.	.	.	.	.	1	.
-	035-01361-0016	PROTECTIVE COVER	[EA]	.	.	.	.	.	.	1
-	047-04874-0001	MTG RACK	[EA]	.	.	.	.	.	.	1
-	047-04877-0001	CNTR SHLD	[EA]	.	.	.	.	.	.	1

047-04878-0003	BTM CVR W/F&H 28V	[EA]	.	.	.	.	.	.	1
047-04879-0001	TOP COVER	[EA]	.	.	.	.	.	.	1
047-05817-0000	RADIATION SHIELD	[EA]	1	.	1	.	1	.	.
057-02203-1033	S/N TAG FLVR BLK	[EA]	1	.	.	.	.	.	.
057-02203-1034	S/N TAG FLVR BLK	[EA]	.	1	.	.	.	.	.
057-02203-1035	S/N TAG FLVR BLK	[EA]	.	.	1	.	.	.	.
057-02203-1036	S/N TAG FLVR BLK	[EA]	.	.	.	1	.	.	.
057-02203-1037	S/N TAG FLVR BLK	[EA]	.	.	.	.	1	.	.
057-02203-1038	S/N TAG FLVR BLK	[EA]	.	.	.	.	.	1	.
057-02305-0000	CNTR SHLD INFO DCL	[EA]	.	.	.	.	.	.	1
057-02311-0000	VOLTAGE TAG 14V	[EA]	1	.	.	.	.	1	.
057-02311-0001	VOLTAGE TAG 28V	[EA]	.	1	1	1	1	.	.
057-02312-0000	DECAL	[EA]	1	.	.	1	1	.	.
057-02313-0102	S/N TAG KX155	[EA]	1	.	1	.	1	.	.
057-02313-0103	S/N TAG KX155	[EA]	.	1	.	1	.	.	.
057-02313-0104	S/N TAG KX155	[EA]	.	.	.	.	.	1	.
057-02337-0000	PRTCTV CVR DECAL	[EA]	.	.	.	.	.	1	.
057-03187-0000	FCC LABEL	[EA]	.	.	.	.	.	.	1
057-03511-0001	DECAL CAUTION	[EA]	.	.	.	.	.	1	.
057-05917-0001	DECAL WARRENTY SEAL	[EA]	.	.	.	.	.	2	.
069-01024-0099	COMMON BOM	[EA]	1	1	1	1	1	1	.
073-00404-0002	FRONT PANEL CSTG	[EA]	.	.	.	.	.	.	1
073-00456-0000	PC BD SPCR	[EA]	.	.	.	.	.	1	.
073-00456-0001	PC BD SPCR	[EA]	1	1	1	1	1	.	.
076-01055-0001	SPCR	[EA]	.	2	.	2	.	2	.
076-01146-0000	HEX SPACER .860	[EA]	.	.	.	.	.	1	.
076-01146-0001	HEX SPACER .922	[EA]	1	.	1	.	1	.	.
076-01146-0002	HEX SPCR .970	[EA]	.	1	.	1	.	.	.
088-00863-0001	LENS	[EA]	.	.	.	.	.	.	2
089-02076-0030	NUT FLAT 4-40	[EA]	.	.	.	.	.	2	5
089-05432-0004	SCR FHP 2-56X1/4	[EA]	.	.	.	.	.	.	7
089-05436-0004	SCR FHP 4-40X1/4	[EA]	.	.	.	.	.	.	2
089-05436-0006	SCR FHP 4-40X3/8	[EA]	6	.	6	.	6	2	.
089-05878-0003	SCR PHP 4-40X3/16	[EA]	2	2	2	2	2	2	.
089-05878-0004	SCR PHP 4-40X1/4	[EA]	.	.	.	.	.	.	1
089-05899-0002	SCR PHP 2-56X1/8	[EA]	.	.	.	.	.	.	6
089-05903-0003	SCR PHP 4-40X3/16	[EA]	.	.	.	.	.	.	1
089-06123-0003	SCR PHP 4-40X3/16	[EA]	.	.	.	.	.	.	2
089-06368-0003	SCR FHP 4-40X3/16	[EA]	.	.	.	.	.	.	4
089-07050-0000	SCR FHP 4-40X7/16	[EA]	.	2	.	2	.	2	.
089-08109-0034	WSHR SPLT LK #4	[EA]	.	.	.	.	.	2	1
090-00991-0000	PROTECTIVE CLOSURE	[EA]	.	.	.	.	.	1	.
090-00991-0001	PROTECTIVE CLOSURE	[EA]	.	.	.	.	.	1	.

-	091-00109-0000	CABLE TIE .234	[EA]	.	.	.	.	.	.	7
-	150-00003-0010	TUBING TFLN 24AWG	[AR]	.	.	.	.	.	.	0
-	150-00049-0010	TUBING SHRINK WHT	[IN]	.	.	.	.	.	.	1
-	150-00103-0000	SLDR SLEEVE	[EA]	.	.	.	.	.	.	6
-	187-01018-0000	CUSHION RELAY	[EA]	.	.	.	.	.	.	2
-	195-00125-0000	S/N TAG KI-206	[EA]	1	.	.	.	.	1	.
-	195-00125-0001	S/N TAG OPTION	[EA]	.	1	1	1	1	.	.
-	200-02612-0005	MAIN CHASSIS 14V	[EA]	1	.	.	.	.	1	.
-	200-02612-0006	MAIN CHASSIS 28V	[EA]	.	1	1	1	1	.	.
-	200-02613-0000	GLIDESLOPE	[EA]	1	.	1	.	1	.	.
-	200-02641-0000	R/T ASSY 14V	[EA]	.	.	.	.	.	1	.
-	200-02641-0001	R/T ASSY 14V 50KHZ	[EA]	1	.	.	.	.	.	.
-	200-02641-0002	R-T ASSY 28V	[EA]	.	1	1	.	.	.	.
-	200-02641-0003	R-T ASSY 28V 50KHZ	[EA]	.	.	.	1	1	.	.
-	200-06374-0000	ISLN & AUDIO AMP	[EA]	.	.	.	.	.	1	.
DS 101	037-00073-0000	DISPLAY KX 165	[EA]	.	.	.	.	.	.	1
L 817	013-00006-0001	FERR BEAD	[EA]	.	.	.	.	.	.	1
L 818	013-00006-0001	FERR BEAD	[EA]	.	.	.	.	.	.	1

069-01024-0039	KX155 NAV/COM	Rev AA	KX 155
069-01024-0040	KX155 NAV/COM	Rev 5	KX 155
069-01024-0041	KX155 NAV/COM	Rev 5	KX 155
069-01024-0042	KX155 NAV/COM	Rev AA	KX 155
069-01024-0043	KX155 NAV/COM	Rev AA	KX 155
069-01024-0099	COMMON BOM	Rev 16	KX 155

SYMBOL	CAS PART NBR	DESCRIPTION	[UOM]	-0039	-0040	-0041	-0042	-0043	-0099
-	008-00005-0004	TND COP LUG	[EA]	.	.	.	1	1	.
-	012-01002-0000	TAPE .250W	[IN]	.	.	.	.	.	2
-	012-01005-0003	TAPE MYLAR .250 W	[IN]	.	.	.	.	.	0.394
-	012-01021-0006	TAPE ELEC 3/8 WD	[IN]	.	.	.	.	.	1
-	012-01038-0000	ADHESIVE DISC	[EA]	.	.	.	.	.	1
-	012-01127-0000	TAG COVER	[EA]	4	4	4	.	.	19
-	012-01154-0000	INSUL CNT SHLD	[EA]	.	.	.	.	.	1
-	012-01181-0001	TOP COVER INSUL	[EA]	1	1	1	1	1	.
-	012-01191-0000	TAG COVER	[EA]	.	.	.	.	.	1
-	016-01008-0004	GLYPTAL 7526 BL	[AR]	.	.	.	.	.	0
-	016-01053-0000	INS GRS MIL G3278	[AR]	.	.	.	.	.	0
-	016-01131-0000	CONTACT CEMENT	[AR]	.	.	.	.	.	0
-	025-00001-0003	WIRE 26 ORN	[IN]	.	.	.	.	.	14
-	025-00001-0004	WIRE 26 YEL	[IN]	.	.	.	.	.	8.5
-	025-00004-0000	WIRE 20 BLK	[IN]	.	.	.	.	.	3
-	025-00004-0005	WIRE 20 GRN	[IN]	.	1.2	.	1.2	.	1.7
-	025-00004-0010	WIRE 20 BK/WH	[IN]	.	0.8	.	0.8	.	5.6
-	025-00004-0011	WIRE 20 BN/WH	[IN]	.	.	.	.	.	2
-	025-00004-0013	WIRE 20 OR/WH	[IN]	.	.	.	.	.	2.1
-	025-00004-0015	WIRE 20 GN/WH	[IN]	.	.	.	.	.	1.7
-	025-00005-0002	WIRE 18 RED	[IN]	.	.	.	.	.	7
-	025-00005-0008	WIRE 18 GRY	[IN]	.	.	.	.	.	14
-	025-00005-0016	WIRE 18 BU/WH	[IN]	.	.	.	.	.	14
-	025-00024-0004	WIRE 22AWG YEL	[IN]	.	.	.	.	.	2.4
-	025-05012-0000	WIRE 2C SHD WHTBLK	[IN]	.	.	.	.	.	7
-	026-00001-0000	WIRE CU 26AWG TINNE	[AR]	.	.	.	.	.	.
-	026-00013-0000	WIRE COAX RG-178B/U	[IN]	.	.	.	18	18	63.12
-	026-00029-0000	WIRE CU 22AWG TINNE	[IN]	.	.	.	.	.	1.2
-	035-01007-0020	CONN CVR NAS820-8	[EA]	1	.	.	1	1	.
-	035-01361-0016	PROTECTIVE COVER	[EA]	.	.	.	.	.	1
-	047-04874-0001	MTG RACK	[EA]	.	.	.	.	.	1
-	047-04877-0001	CNTR SHLD	[EA]	.	.	.	.	.	1
-	047-04878-0003	BTM CVR W/F&H 28V	[EA]	.	.	.	.	.	1

SYMBOL	CAS PART NBR	DESCRIPTION	[UOM]	-0039	-0040	-0041	-0042	-0043	-0099
-	047-04879-0001	TOP COVER	[EA]	.	.	.	.	.	1
-	047-05817-0000	RADIATION SHIELD	[EA]	.	.	.	1	1	.
-	057-02203-1039	S/N TAG FLVR BLK	[EA]	1	.	.	.	.	.
-	057-02203-1040	S/N TAG FLVR BLK	[EA]	.	1	.	.	.	.
-	057-02203-1041	S/N TAG FLVR BLK	[EA]	.	.	1	.	.	.
-	057-02203-1042	S/N TAG FLVR BLK	[EA]	.	.	.	1	.	.
-	057-02203-1043	S/N TAG FLVR BLK	[EA]	.	.	.	.	1	.
-	057-02305-0000	CNTR SHLD INFO DCL	[EA]	.	.	.	.	.	1
-	057-02311-0000	VOLTAGE TAG 14V	[EA]	.	1	.	1	.	.
-	057-02311-0001	VOLTAGE TAG 28V	[EA]	1	.	1	.	1	.
-	057-02312-0000	DECAL	[EA]	.	1	1	.	.	.
-	057-02313-0104	S/N TAG KX155	[EA]	1	1	1	.	.	.
-	057-02313-0105	S/N TAG KX155	[EA]	.	.	.	1	1	.
-	057-02337-0000	PRTCTV CVR DECAL	[EA]	1	.	.	1	1	.
-	057-03187-0000	FCC LABEL	[EA]	.	.	.	.	.	1
-	057-03511-0001	DECAL CAUTION	[EA]	1	.	.	1	1	.
-	057-05917-0001	DECAL WARRENTY SEAL	[EA]	2	.	.	2	2	.
-	069-01024-0099	COMMON BOM	[EA]	1	1	1	1	1	.
-	073-00404-0002	FRONT PANEL CSTG	[EA]	.	.	.	.	.	1
-	073-00456-0000	PC BD SPCR	[EA]	1	1	1	1	1	.
-	076-01055-0001	SPCR	[EA]	2	2	2	.	.	.
-	076-01146-0000	HEX SPACER .860	[EA]	1	1	1	1	1	.
-	088-00863-0001	LENS	[EA]	.	.	.	.	.	2
-	089-02076-0030	NUT FLAT 4-40	[EA]	2	2	2	2	2	5
-	089-05432-0004	SCR FHP 2-56X1/4	[EA]	.	.	.	.	.	7
-	089-05436-0004	SCR FHP 4-40X1/4	[EA]	.	.	.	.	.	2
-	089-05436-0006	SCR FHP 4-40X3/8	[EA]	2	2	2	8	8	.
-	089-05878-0003	SCR PHP 4-40X3/16	[EA]	2	2	2	2	2	.
-	089-05878-0004	SCR PHP 4-40X1/4	[EA]	.	.	.	.	.	1
-	089-05899-0002	SCR PHP 2-56X1/8	[EA]	.	.	.	.	.	6
-	089-05903-0003	SCR PHP 4-40X3/16	[EA]	.	.	.	.	.	1
-	089-06123-0003	SCR PHP 4-40X3/16	[EA]	.	.	.	.	.	2
-	089-06368-0003	SCR FHP 4-40X3/16	[EA]	.	.	.	.	.	4
-	089-07050-0000	SCR FHP 4-40X7/16	[EA]	2	2	2	.	.	.
-	089-08109-0034	WSHR SPLT LK #4	[EA]	2	2	2	2	2	1
-	090-00991-0000	PROTECTIVE CLOSURE	[EA]	1	.	.	.	.	.
-	090-00991-0001	PROTECTIVE CLOSURE	[EA]	1	.	.	2	2	.
-	091-00109-0000	CABLE TIE .234	[EA]	.	.	.	.	.	7
-	150-00003-0010	TUBING TFLN 24AWG	[AR]	.	.	.	.	.	0
-	150-00049-0010	TUBING SHRINK WHT	[IN]	.	.	.	.	.	1
-	150-00103-0000	SLDR SLEEVE	[EA]	.	.	.	2	2	6
-	155-02026-0016	JMPR CA ASSY 8P	[EA]	.	.	.	1	1	.

SYMBOL	CAS PART NBR	DESCRIPTION	[UOM]	-0039	-0040	-0041	-0042	-0043	-0099
-	187-01018-0000	CUSHION RELAY	[EA]	.	.	.	.	.	2
-	195-00125-0000	S/N TAG K1-206	[EA]	.	1	.	1	.	.
-	195-00125-0001	S/N TAG OPTION	[EA]	1	.	1	.	1	.
-	200-02612-0005	MAIN CHASSIS 14V	[EA]	.	1	.	1	.	.
-	200-02612-0006	MAIN CHASSIS 28V	[EA]	1	.	1	.	1	.
-	200-02613-0000	GLIDESLOPE	[EA]	.	.	.	1	1	.
-	200-02641-0000	R/T ASSY 14V	[EA]	.	.	.	1	.	.
-	200-02641-0001	R/T ASSY 14V 50KHZ	[EA]	.	1	.	.	.	.
-	200-02641-0002	R-T ASSY 28V	[EA]	1	.	.	.	1	.
-	200-02641-0003	R-T ASSY 28V 50KHZ	[EA]	.	.	1	.	.	.
-	200-06374-0000	ISLN & AUDIO AMP	[EA]	1	1	1	1	1	.
DS 101	037-00073-0000	DISPLAY KX 165	[EA]	.	.	.	.	.	1
L 817	013-00006-0001	FERR BEAD	[EA]	.	.	.	.	.	1
L 818	013-00006-0001	FERR BEAD	[EA]	.	.	.	.	.	1

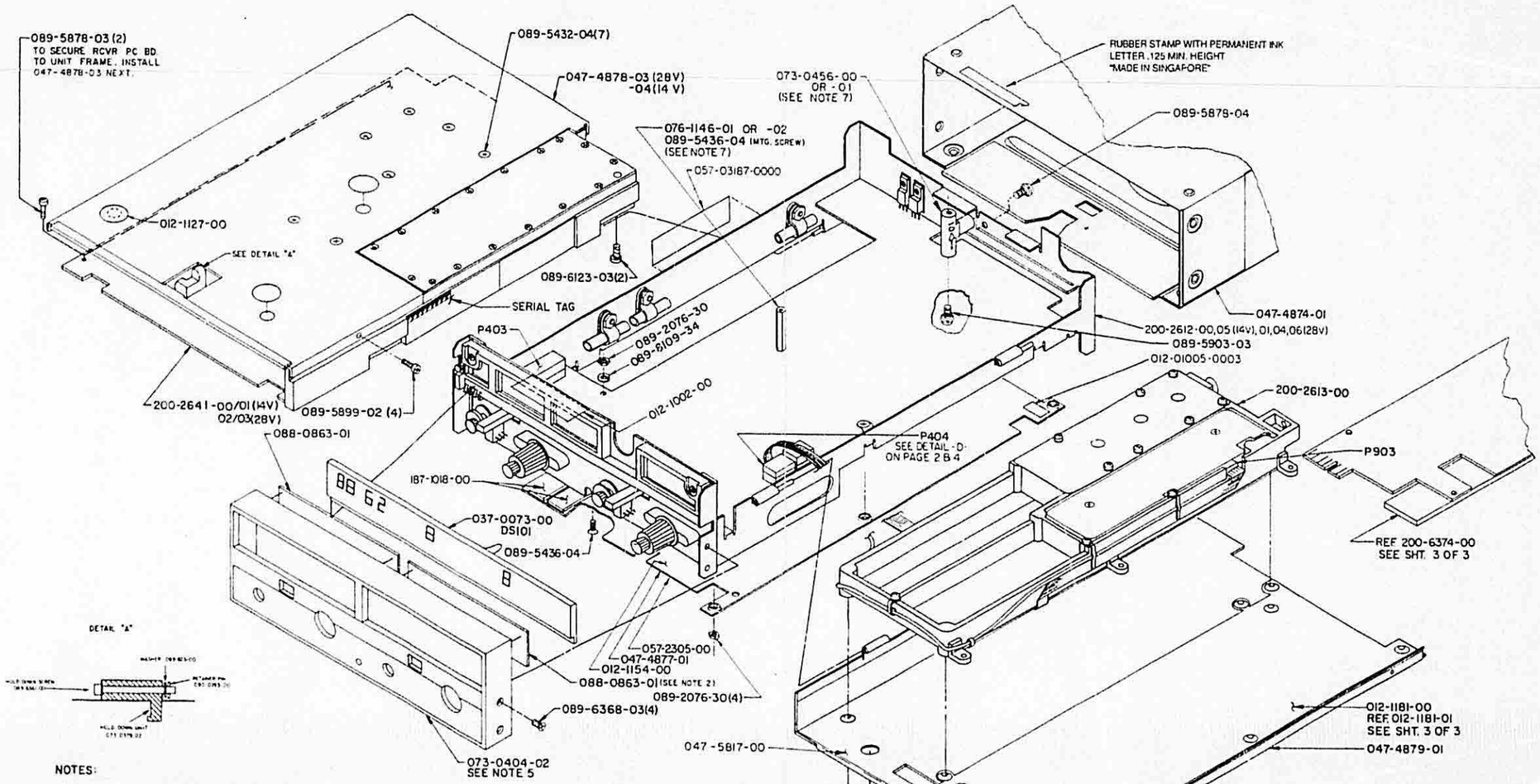

NOTES:

(1) USE LIQUID STAKING COMPOUND FOR ALL FASTENER WHERE LOCKWASHERS, ETC. ARE NOT USED.(016-1008-04).

(2) BOND LENS TO FRONT PANEL WITH ADHESIVE 016-1131-00 FURTHER RETENTION OF LENS MAY BE OBTAINED BY SLIGHTLY UPSETTING THE TENONS WHICH PROJECT FROM THE PANEL THROUGH THE LENS.

(3) APPLY SMALL AMOUNT OF LUBRICANT 016-1053-00 TO HINGE PINS.

(4) MANUFACTURING WILL APPLY (057-2311-00 14 V & 057-2311-01 28V) VOLTAGE DECAL TO FRONT PANEL PROTECTIVE COVER.

(5) FRONT PANEL ASSY. 200-2911-00 IS AVAILABLE WITH LENS SECURED IN PANEL.

(6) APPLY 012-1127-00 TAG CYR TO ALL UNUSED SCREW HOLES AND ALL ALIGNMENT HOLES.

FIGURE 6-2F KX 155 Final Assembly
(Dwg. No. 300-02486-0000, Rev. 48, sheet 1 of 4)

NOTES

1. WIRE TIE DOWN IS 026-0001-00,26 GA. BUSS WIRE WITH 150-0003-10, INSULATIVE SLEEVING.
2. WATCH FOR PINCHING OF WIRES BETWEEN CAP & UNIT FRAME.
3. FOLD FLEX CABLE PROPERLY TO AVOID PINCHING (ALL FLEX CABLES).
4. JUMPER WIRE (026-00003-0000) IS USED TO HOLD DOWN THE COAX CABLE, AT THE GROUND, TO THE SOLDER PAD. SEE DETAIL "F".
5. STRIP OUTER INSULATION AND SOLDER BRAID TO FENCE OR BIFURCATED TERMINAL E360 WHERE SHOWN.
6. SECURE WITH CABLE TIE (008-00005-0004).
7. SOLDER LEAD OF CAPACITOR C1106 TO E201 IN 28V RADIOS ONLY IN 14 V RADIOS, SOLDER LEAD TO E215.
8. STRIP OUTER INSULATION OF COAX AND SOLDER BRAID OF NAV AND COMM COAX'S (WHICH TERMINATES AT E350, E347, E348, & E349) TOGETHER WITH SOLDER SLEEVE 150-00072-0000

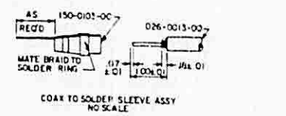

COAX TO SOLDER SLEEVE ASSY
NO SCALE

DETAIL "B"
14 VOLTS

WIRING DIAGRAM (14 & 28V)						
FROM	TO	DESCRIPTION	KPN	FEET	VOLTS	
E 136	E436	26 ORN	025-0001-03	1.17	14, 28	
E 137	E 437	18 BLU/WHT	025-0005-16	1.16	14, 28	
E 138	E438	18 GRY	025-0005-08	1.16	14, 28	
E139/E140	E439/E440	COAX RG178	026-0013-00	.63	14, 28	
E300	E800	20 BLK/WHT	025-0004-10	.52	14	
E 141/E142	E441/E442	COAX RG 178	026-0013-00	.70	14, 28	
E204	E444	CABLES(PAIR) WHT	025-5012-00	.70	28	*
E 201	E445	CABLES(PAIR) BLK	025-5012-00	.70	14, 28	*
E202	E443	18 RED	025-0005-02	.58	14, 28	
E203	E446	26 YEL	025-0001-04	.71	14, 28	
E207	E444	CABLES(PAIR) WHT	025-5012-00	.70	14	*
E347/E350	E447/GND	COAX RG 178	026-0013-00	1.58	14, 28	
E348/E349	E448/GND	COAX RG 178	026-0013-00	1.46	14, 28	
E449/GND	E902/E903	COAX RG 178	026-0013-00	1.50	14, 28	
E 206	E301	20 ORN	025-0004-05	.24	14	
E 206	E209	20 GRN	025-0004-05	.14	28	
E 209	E 309	20 GRN/WHT	025-0004-15	.14	14, 28	
E 213	E310	26 WHT/YEL	025-0018-94	.20	14, 28	
E 300	E800	20 BLK/WHT	025-0004-10	.46	28	
E301	E801	20 BRN/WHT	025-0004-11	.16	28	
E302/E303 GND	E802/E803 GND	COAX RG 178	026-0013-00	.39	14, 28	
E304	E804	20 ORN/WHT	025-0004-13	.17	14, 28	
E305/E306 GND	E805/E806 GND	COAX RG 178	026-0013-00	.50	14, 28	
E308	E808	20 BLK	025-0004-00	.11	14, 28	
E316	L801	20 BRN/WHT	025-0004-11	.16	14	
E215/GND	—	CABLES(PAIR)BRAID	025-5012-00	.70	14, 28	*

* SEE DETAIL "C"

DETAIL "A"
HASH FILTER ASSY.

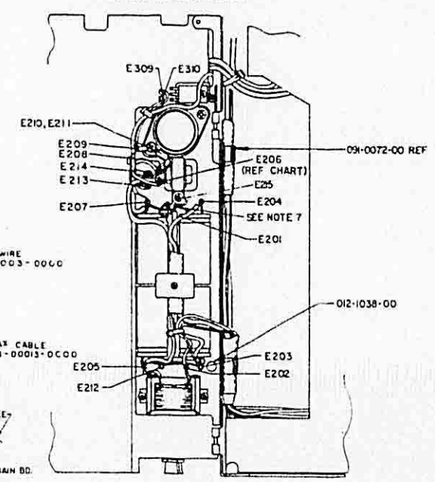

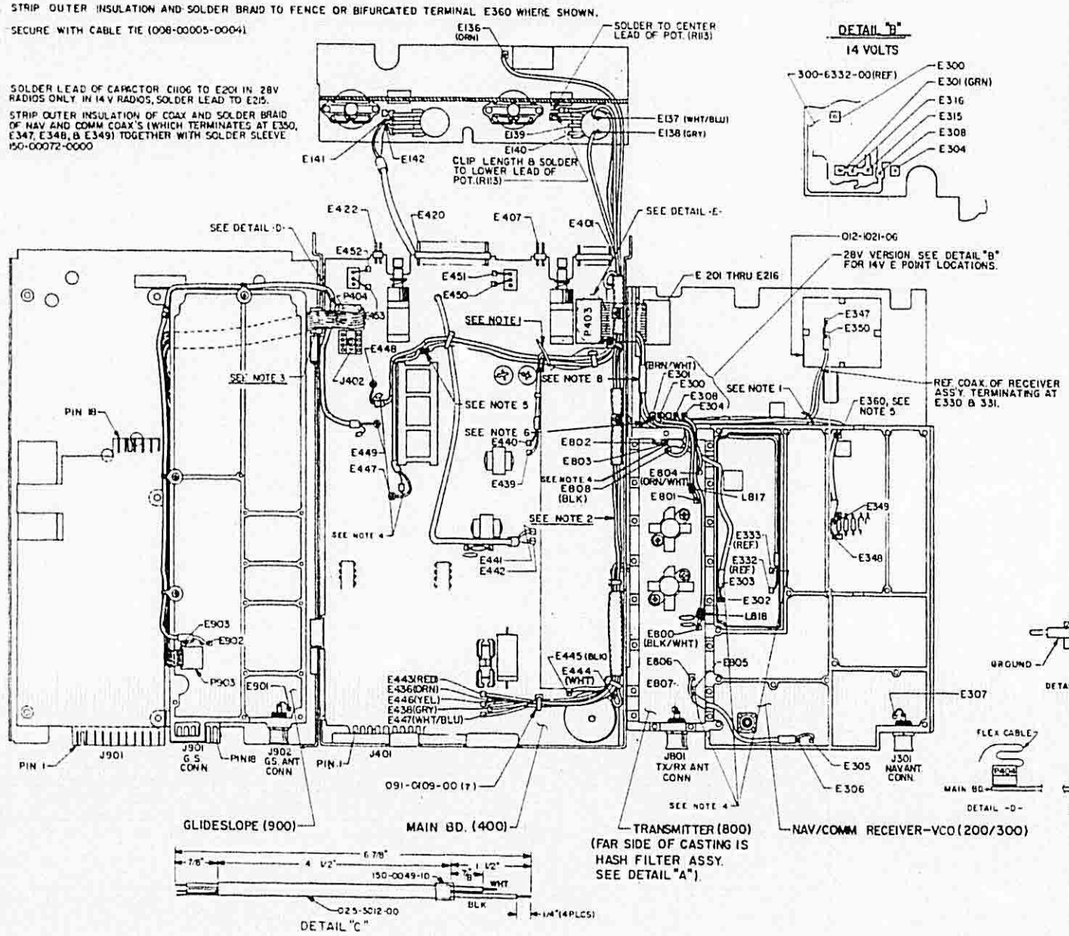

FIGURE 6-2F KX 155 Final Assembly
(Dwg. No. 300-02486-0000, Rev. 48, sheet 2 of 4)

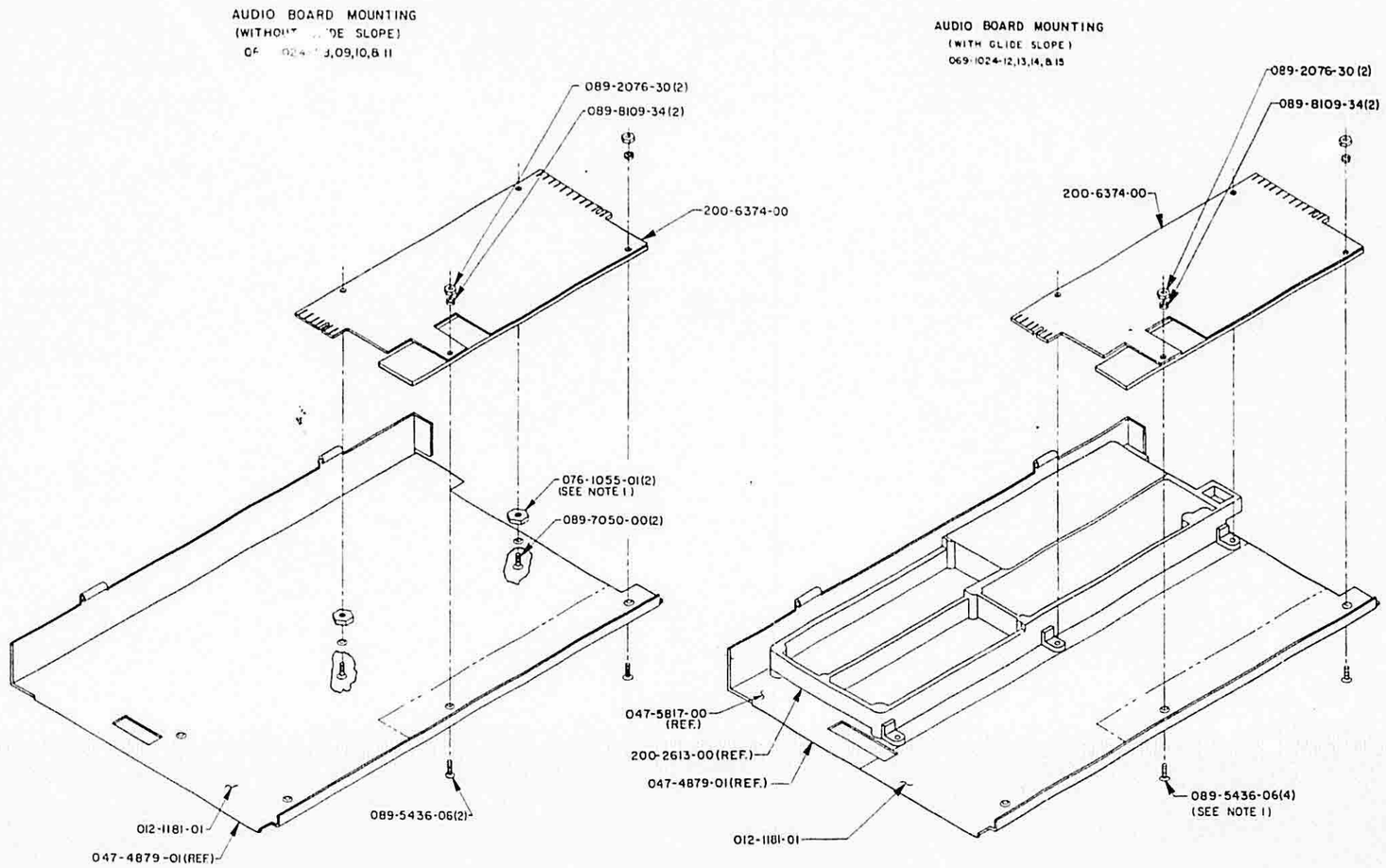

NOTES:
1. SEE BILL OF MATERIAL FOR CORRECT SCREWS AND SPACERS.

FIGURE 6-2F KX 155 Final Assembly
(Dwg. No. 300-02486-0000, Rev. 48, sheet 3 of 4)

NOTES

1. WIRE TIE DOWN IS 026-0001-00,26 GA. BUSS WIRE WITH 150-0003-10, INSULATIVE SLEEVING.
2. WATCH FOR PINCHING OF WIRES BETWEEN CAP & UNIT FRAME.
3. FOLD FLEX CABLE PROPERLY TO AVOID PINCHING (ALL FLEX CABLES)
4. JUMPER WIRE (026-00003-0000) IS USED TO HOLD DOWN THE COAX CABLE, AT THE GROUND, TO THE SOLDER PAD.
5. 14V KX 155: STRIP OUTER INSULATION OF NAV COAX (GOING TO E348/E349) AND SOLDER BRAID TO BIFURCATED TERM (1.315) WHERE SHOWN.
   28V KX 155: STRIP OUTER INSULATION OF NAV COAX (GOING TO E348/E349) AND COMM COAX (GOING TO E347/E350). SOLDER BRAIDS OF COMM AND NAV COAXS TO BIFURCATED TERM (1.315) WHERE SHOWN.
6. SECURE WITH CABLE TIE (008-00005-0004).
7. SOLDER LEAD OF CAPACITOR C1106 TO E201 IN 28V RADIOS ONLY. IN 14 V RADIOS, SOLDER LEAD TO E215.
8. STRIP OUTER INSULATION OF COAX AND SOLDER BRAID OF NAV AND COMM COAX'S (WHICH TERMINATES AT E350, E347, E348, & E349) THEN SECURE AND SOLDER BRAID TO (008-00005-0004) CABLE TIE.
9. BENT LUG TO HOLD COAXIAL CABLE.

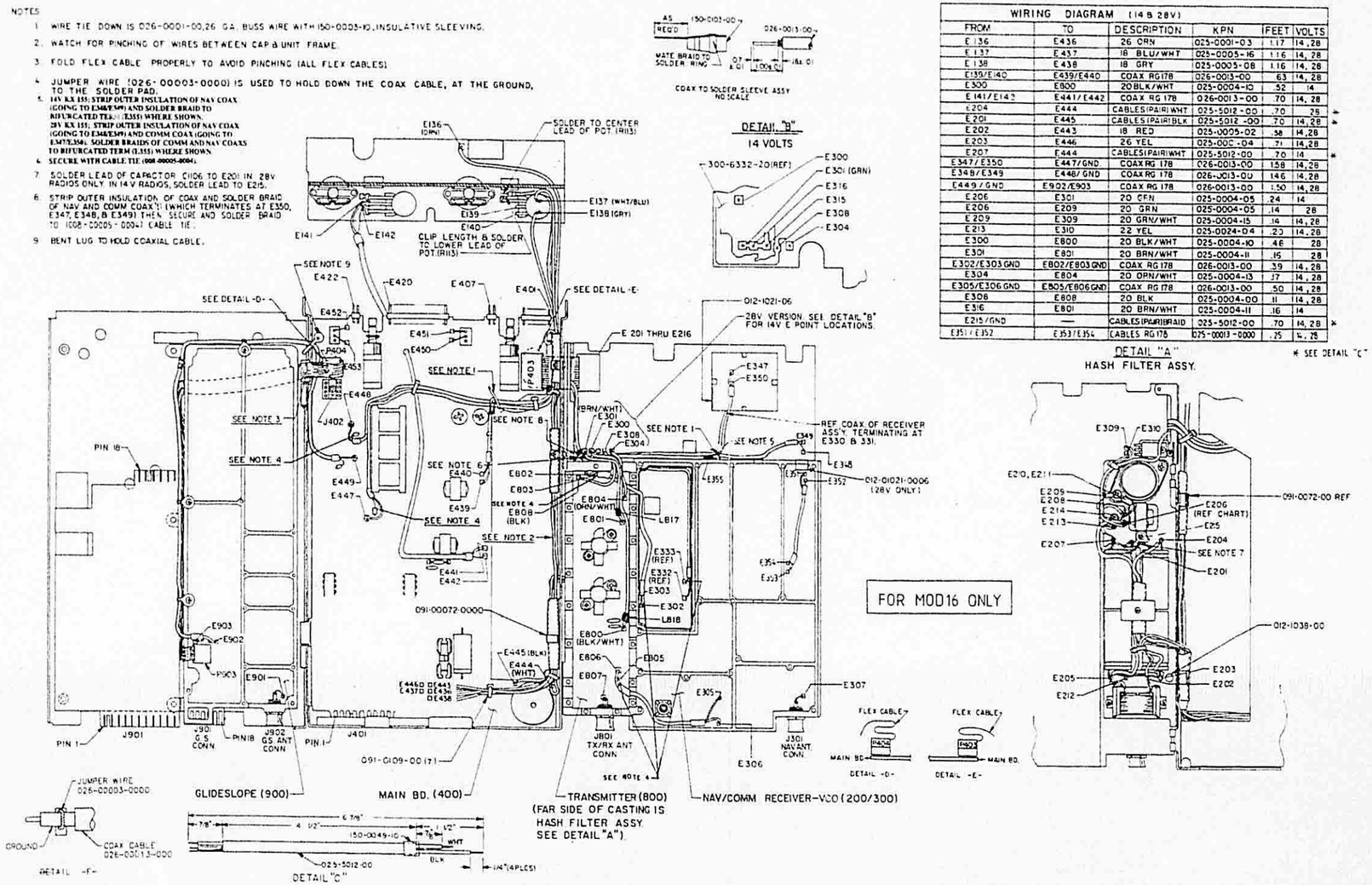

WIRING DIAGRAM (14 & 28V)					
FROM	TO	DESCRIPTION	KPN	FEET	VOLTS
E136	E436	26 ORN	025-0001-03	1.17	14,28
E137	E437	18 BLU/WHT	025-0005-16	1.16	14,28
E138	E438	18 GRY	025-0005-08	1.16	14,28
E139/E140	E439/E440	COAX RG178	026-0013-00	.63	14,28
E300	E800	20 BLK/WHT	025-0004-10	.52	14
E141/E142	E441/E442	COAX RG 178	026-0013-00	.70	14,28
E204	E444	CABLES(PAIR)WHT	025-5012-00	.70	28 *
E201	E445	CABLES(PAIR)BLK	025-5012-00	.70	14,28 *
E202	E443	18 RED	025-0005-02	.58	14,28
E203	E446	26 YEL	025-0004-04	.71	14,28
E207	E444	CABLES(PAIR)WHT	025-5012-00	.70	14 *
E347/E350	E447/GND	COAX RG 178	026-0013-00	1.58	14,28
E348/E349	E448/GND	COAX RG 178	026-0013-00	1.46	14,28
E449/GND	E902/E903	COAX RG 178	026-0013-00	1.50	14,28
E206	E301	20 ORN	025-0004-05	.24	14
E206	E209	20 GRN	025-0004-05	.14	28
E209	E309	20 GRN/WHT	025-0004-15	.16	14,28
E213	E310	22 YEL	025-0024-04	.20	14,28
E300	E800	20 BLK/WHT	025-0004-10	.46	28
E301	E801	20 BRN/WHT	025-0004-11	.16	28
E302/E303 GND	E802/E803 GND	COAX RG 178	026-0013-00	.39	14,28
E304	E804	20 ORN/WHT	025-0004-13	.17	14,28
E305/E306 GND	E805/E806 GND	COAX RG 178	026-0013-00	.50	14,28
E306	E808	20 BLK	025-0004-00	.11	14,28
E316	E801	20 BRN/WHT	025-0004-11	.16	14
E215/GND	—	CABLES(PAIR)BRAID	025-5012-00	.70	14,28 *
E351/E352	E353/E354	CABLES RG178	025-0001-0000	.25	14,28

* SEE DETAIL "C"

FIGURE 6-2F KX 155 Final Assembly
(Dwg. No. 300-02486-0000, Rev. 48, sheet 4 of 4)

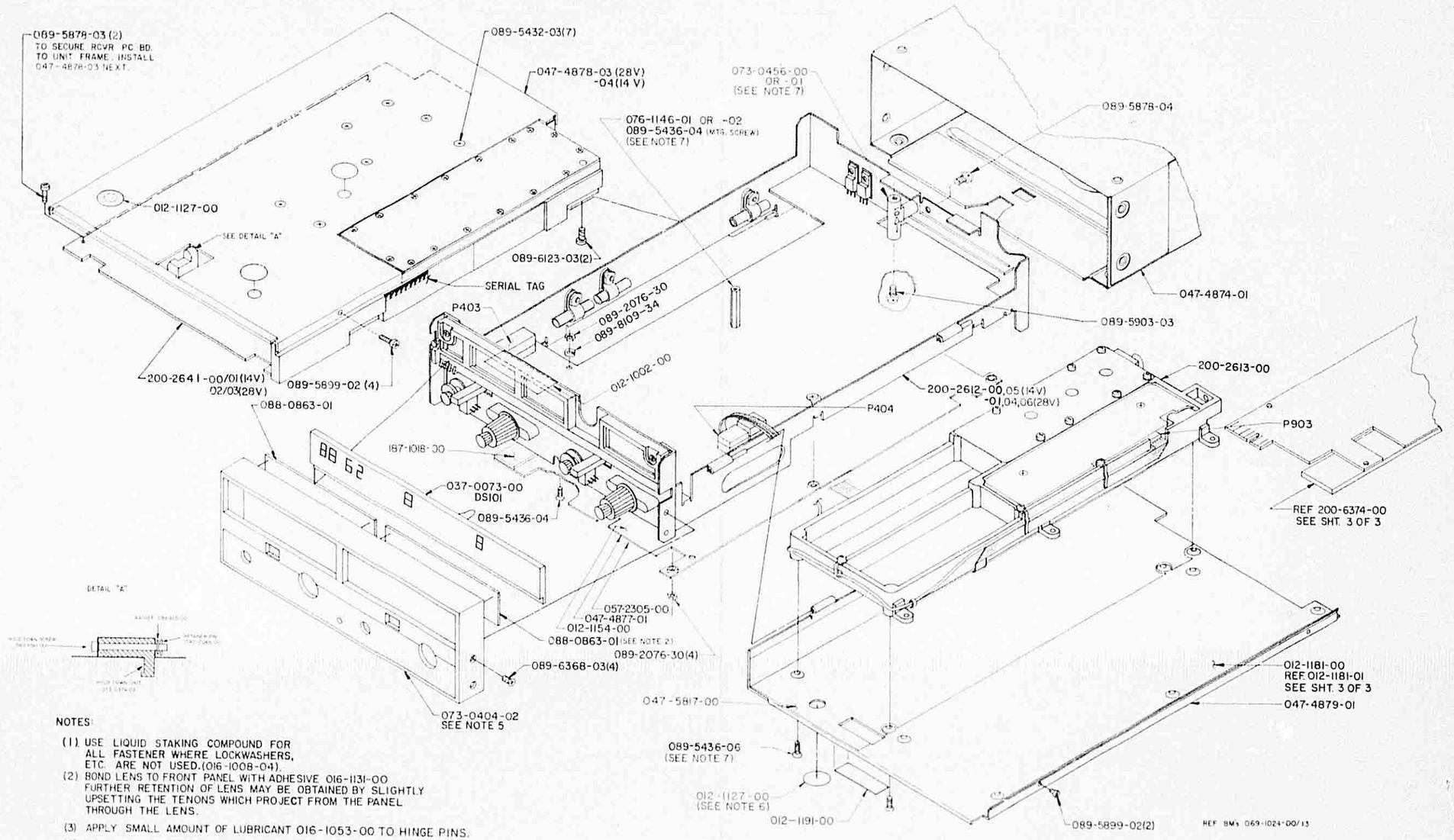

NOTES:

(1) USE LIQUID STAKING COMPOUND FOR ALL FASTENER WHERE LOCKWASHERS, ETC. ARE NOT USED.(016-1008-04).

(2) BOND LENS TO FRONT PANEL WITH ADHESIVE 016-1131-00 FURTHER RETENTION OF LENS MAY BE OBTAINED BY SLIGHTLY UPSETTING THE TENONS WHICH PROJECT FROM THE PANEL THROUGH THE LENS.

(3) APPLY SMALL AMOUNT OF LUBRICANT 016-1053-00 TO HINGE PINS.

(4) MANUFACTURING WILL APPLY (057-2311-00 14 V & 057-2311-01 28V) VOLTAGE DECAL TO FRONT PANEL PROTECTIVE COVER.

(5) FRONT PANEL ASSY 200-2911-00 IS AVAILABLE WITH LENS SECURED IN PANEL.

(6) APPLY 012-1127-00 TAG CYR TO ALL UNUSED SCREW HOLES AND ALL ALIGNMENT HOLES.

(7) SEE BILL OF MATERIAL FOR CORRECT SCREWS AND SPACERS.

FIGURE 6-2E KX 155 FINAL ASSEMBLY
(Dwg. No. 300-02486-0000, R-33)
(Sheet 1 of 3)

NOTES

1. WIRE TIE DOWN IS 026-0001-00,26 GA. BUSS WIRE WITH 150-0003-10, INSULATIVE SLEEVING.
2. WATCH FOR PINCHING OF WIRES BETWEEN CAP & UNIT FRAME.
3. FOLD FLEX CABLE PROPERLY TO AVOID PINCHING (ALL FLEX CABLES).
4. SOLDER GROUND WIRE OF 150-0103-00, COAX TERMINATION, TO 008-0104-00, PC BD TERMINATION CLIP, FOR GOOD GROUNDING, TYPICAL.
5. STRIP OUTER INSULATION AND SOLDER BRAID TO FENCE OR BIFURCATED TERMINAL E360 WHERE SHOWN.
6. STRIP OUTER INSULATION, AND SOLDER BRAID OF COAX TO CABLE TIE (008-0005-04) ON COMM. AND NAV. COAX, WHICH TERMINATES AT E350, E347, E348, E349.
7. SOLDER LEAD OF CAPACITOR C1106 TO E201 IN 28V RADIOS ONLY. IN 14V RADIOS, SOLDER LEAD TO E215.

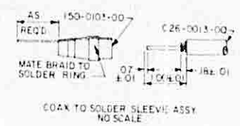

COAX TO SOLDER SLEEVE ASSY. NO SCALE

DETAIL "B"
14 VOLTS

WIRING DIAGRAM (14 & 28V)					
FROM	TO	DESCRIPTION	KPN	FEET	VOLTS
E136	E436	26 ORN	025-0001-03	1.25	14,28
E137	E437	18 BLU/WHT	025-0005-16	1.16	14, 28
E138	E438	18 GRY	025-0005-08	1.16	14, 28
E139/E140	E439/E440	COAX RG178	026-0013-00	.63	14, 28
E300	E800	20 BLK/WHT	025-0004-10	.52	14
E141/E142	E441/E442	COAX RG 178	026-0013-00	.70	14, 28
E204	E444	CABLES(PAIR) WHT	025-5012-00	.70	28 *
E201	E445	CABLES(PAIR)BLK	025-5012-00	.70	14,28 *
E202	E443	18 RED	025-0005-02	.58	14,28
E203	E446	26 YEL	025-0001-04	.71	14,28
E207	E444	CABLES(PAIR)WHT	025-5012-00	.70	14 *
E347/E350	E447/GND	COAX RG 178	026-0013-00	1.58	14,28
E348/E349	E448/GND	COAX RG 178	026-0013-00	1.46	14,28
E449/GND	E902/E903	COAX RG 178	026-0013-00	1.50	14,28
E206	E301	20 GRN	025-0004-05	.24	14
E206	E209	20 GRN	025-0004-05	.14	28
E209	E309	20 GRN/WHT	025-0004-15	.14	14,28
E213	E310	26 WHT/YEL	025-0018-94	.20	14,28
E300	E800	20 BLK/WHT	025-0004-10	.46	28
E301	E801	20 BRN/WHT	025-0004-11	.16	28
E302/E303 GND	E802/E803 GND	COAX RG 178	026-0013-00	.39	14,28
E304	E804	20 ORN/WHT	025-0004-13	.17	14,28
E305/E306 GND	E805/E806 GND	COAX RG 178	026-0013-00	.50	14,28
E308	E808	20 BLK	025-0004-00	.11	14,28
E316	E801	20 BRN/WHT	025-0004-11	.16	14
E215/GND	—	CABLES(PAIR)BRAID	025-5012-00	.70	14,28 *

* SEE DETAIL "C"

DETAIL "A"

HASH FILTER ASSY.

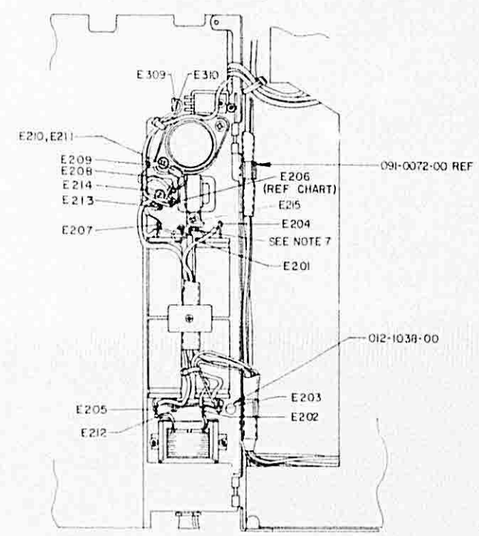

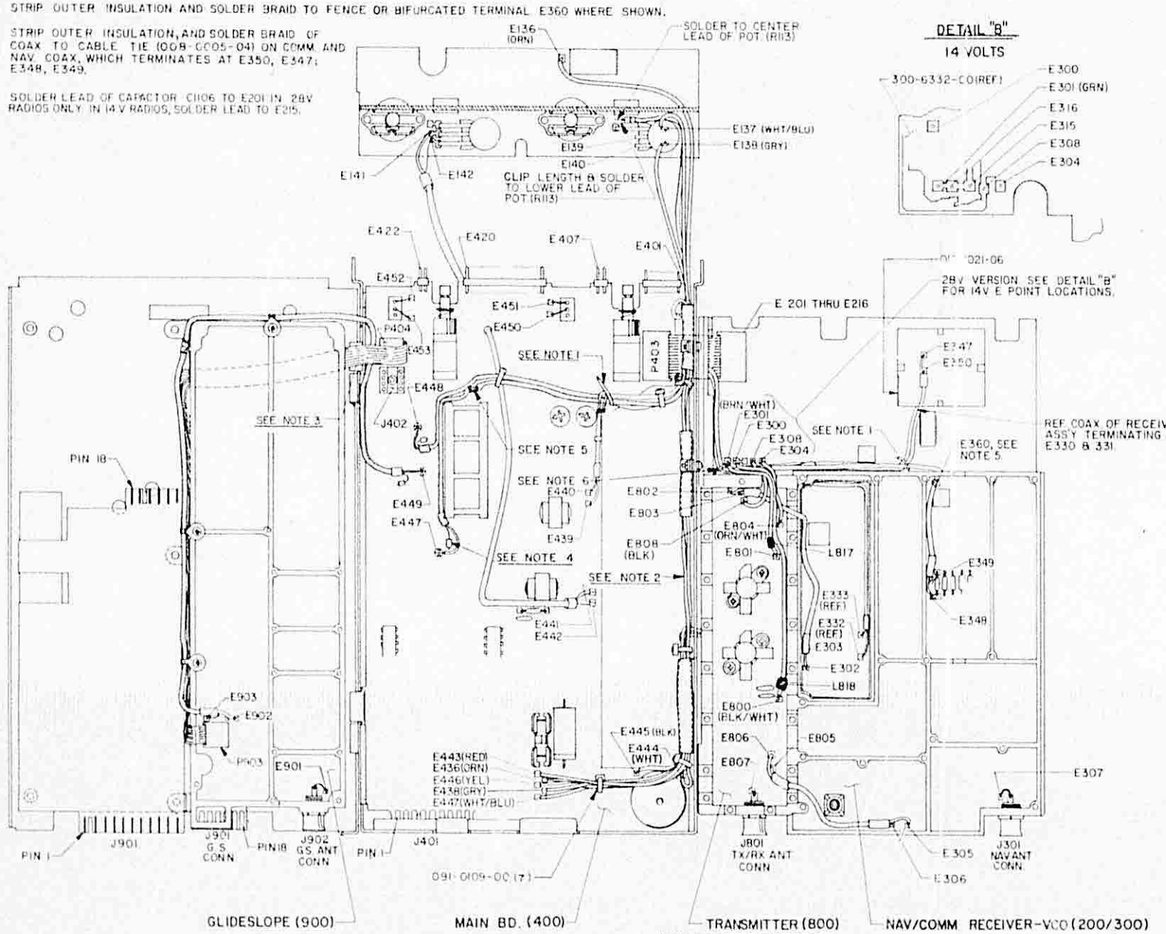

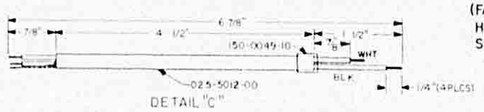

DETAIL "C"

FIGURE 6-2E KX 155 FINAL ASSEMBLY
(Dwg. No. 300-02486-0000, R-33)
(Sheet 2 of 3)

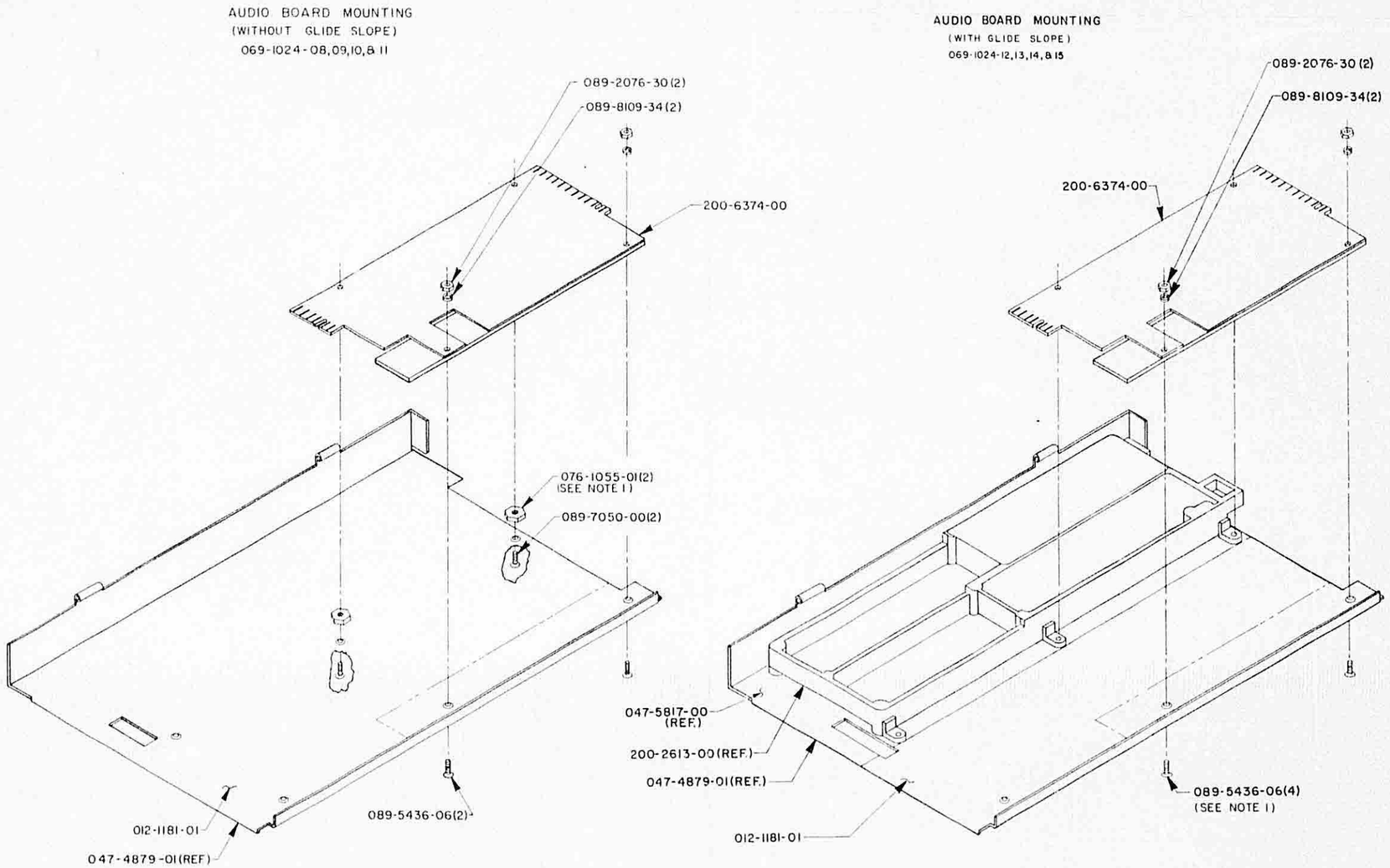

NOTES:
1. SEE BILL OF MATERIAL FOR CORRECT SCREWS AND SPACERS.

FIGURE 6-2E KX 155 FINAL ASSEMBLY
(Dwg. No. 300-02486-0000, R-33)
(Sheet 3 of 3)

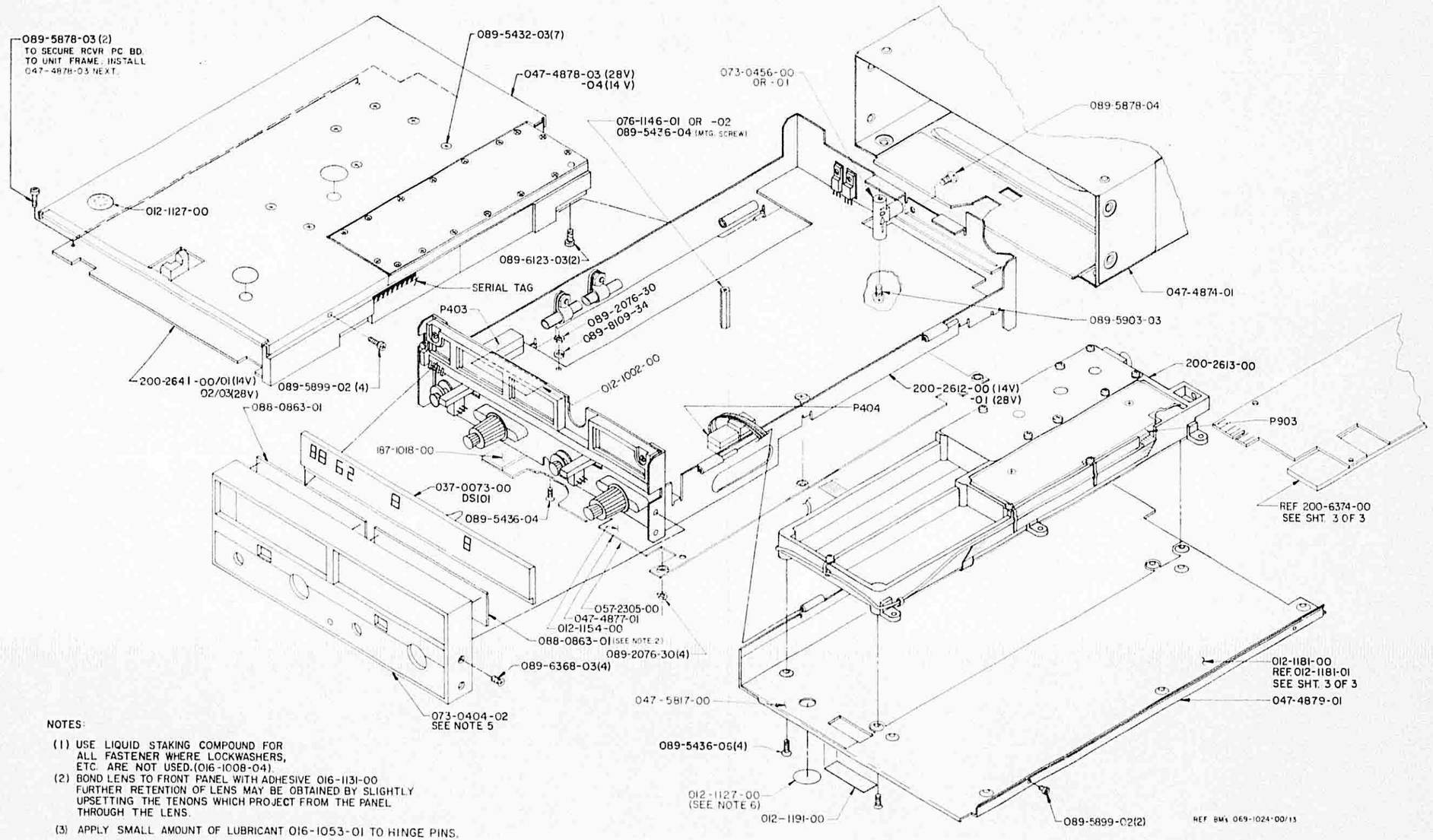

NOTES:

(1) USE LIQUID STAKING COMPOUND FOR ALL FASTENER WHERE LOCKWASHERS, ETC. ARE NOT USED.(016-1008-04).

(2) BOND LENS TO FRONT PANEL WITH ADHESIVE 016-1131-00 FURTHER RETENTION OF LENS MAY BE OBTAINED BY SLIGHTLY UPSETTING THE TENONS WHICH PROJECT FROM THE PANEL THROUGH THE LENS.

(3) APPLY SMALL AMOUNT OF LUBRICANT 016-1053-01 TO HINGE PINS.

(4) MANUFACTURING WILL APPLY (057-2311-00 14 V & 057-2311-01 28V) VOLTAGE DECAL TO FRONT PANEL PROTECTIVE COVER.

(5) FRONT PANEL ASSY. 200-2911-00 IS AVAILABLE WITH LENS SECURED IN PANEL.

(6) APPLY 012-1127-00 TAG CYR TO ALL UNUSED SCREW HOLES AND ALL ALIGNMENT HOLES.

FIGURE 6-2D KX 155 FINAL ASSEMBLY
(Dwg. No. 300-02486-0000, R-25)
(Sheet 1 of 3)

NOTES

1. WIRE TIE DOWN IS 026-0001-00,26 GA. BUSS WIRE WITH 150-0003-10, INSULATIVE SLEEVING.
2. WATCH FOR PINCHING OF WIRES BETWEEN CAP & UNIT FRAME.
3. FOLD FLEX CABLE PROPERLY TO AVOID PINCHING (ALL FLEX CABLES)
4. SOLDER GROUND WIRE OF 150-0103-00, COAX TERMINATION, TO 008-0104-00, PC BD TERMINATION CLIP, FOR GOOD GROUNDING, TYPICAL.
5. STRIP OUTER INSULATION AND SOLDER BRAID TO FENCE OR BIFURCATED TERMINAL E360 WHERE SHOWN.
6. STRIP OUTER INSULATION, AND SOLDER BRAID OF COAX TO CABLE TIE (008-0005-04) ON COMM AND NAV COAX, WHICH TERMINATES AT E350, E347; E348, E349.
7. SOLDER LEAD OF CAPACITOR C106 TO E201 IN 28V RADIOS ONLY. IN 14 V RADIOS, SOLDER LEAD TO E215.

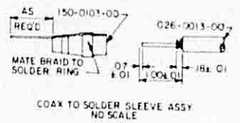

COAX TO SOLDER SLEEVE ASSY
NO SCALE

DETAIL "B"

14 VOLTS

WIRING DIAGRAM (14 & 28V)					
FROM	TO	DESCRIPTION	KPN	FEET	VOLTS
E136	E436	26 ORN	025-0001-03	1.25	14,28
E137	E437	18 BLU/WHT	025-0005-16	1.16	14, 28
E138	E438	18 GRY	025-0005-08	1.16	14, 28
E139/E140	E439/E440	COAX RG178	026-0013-00	.63	14, 28
E300	E800	20 BLK/WHT	025-0004-10	.52	14
E141/E142	E441/E442	COAX RG 178	026-0013-00	.70	14, 28
E204	E444	CABLES(PAIR) RED	025-5001-00	.70	28 *
E201	E445	CABLES(PAIR) BLK	025-5001-00	.70	14,28 *
E202	E443	18 RED	025-0005-02	.95	14,28
E203	E446	26 YEL	025-0001-04	1.00	14,28
E207	E444	CABLES(PAIR) RED	025-5001-00	.70	14 *
E347/E350	E447/GND	COAX RG 178	026-0013-00	1.58	14,28
E348/E349	E448/GND	COAX RG 178	026-0013-00	1.46	14,28
E449/GND	E902/E903	COAX RG 178	026-0013-00	1.50	14,28
E206	E301	20 GRN	025-0004-05	.24	14
E206	E209	20 GRN	025-0004-05	.14	28
E209	E309	20 GRN/WHT	025-0004-15	.14	14,28
E213	E310	26 WHT/YEL	025-0018-94	.20	14,28
E300	E800	20 BLK/WHT	025-0004-10	.46	28
E301	E801	20 BRN/WHT	025-0004-11	.16	28
E302/E303 GND	E802/E803 GND	COAX RG 178	026-0013-00	.39	14,28
E304	E804	20 ORN/WHT	025-0004-13	.17	14,28
E305/E306 GND	E805/E806 GND	COAX RG 178	026-0013-00	.50	14,28
E308	E808	20 BLK	025-0004-00	.11	14,28
E316	E801	20 BRN/WHT	025-0004-11	.16	14
E215/GND	—	CABLES(PAIR) BRAID	025-5001-00	.70	14,28 *

*SEE DETAIL "C"

DETAIL "A"

HASH FILTER ASSY.

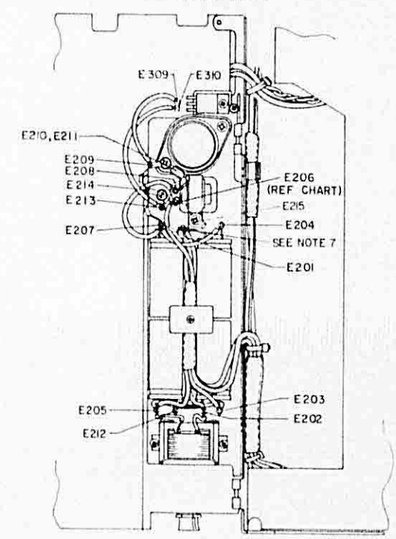

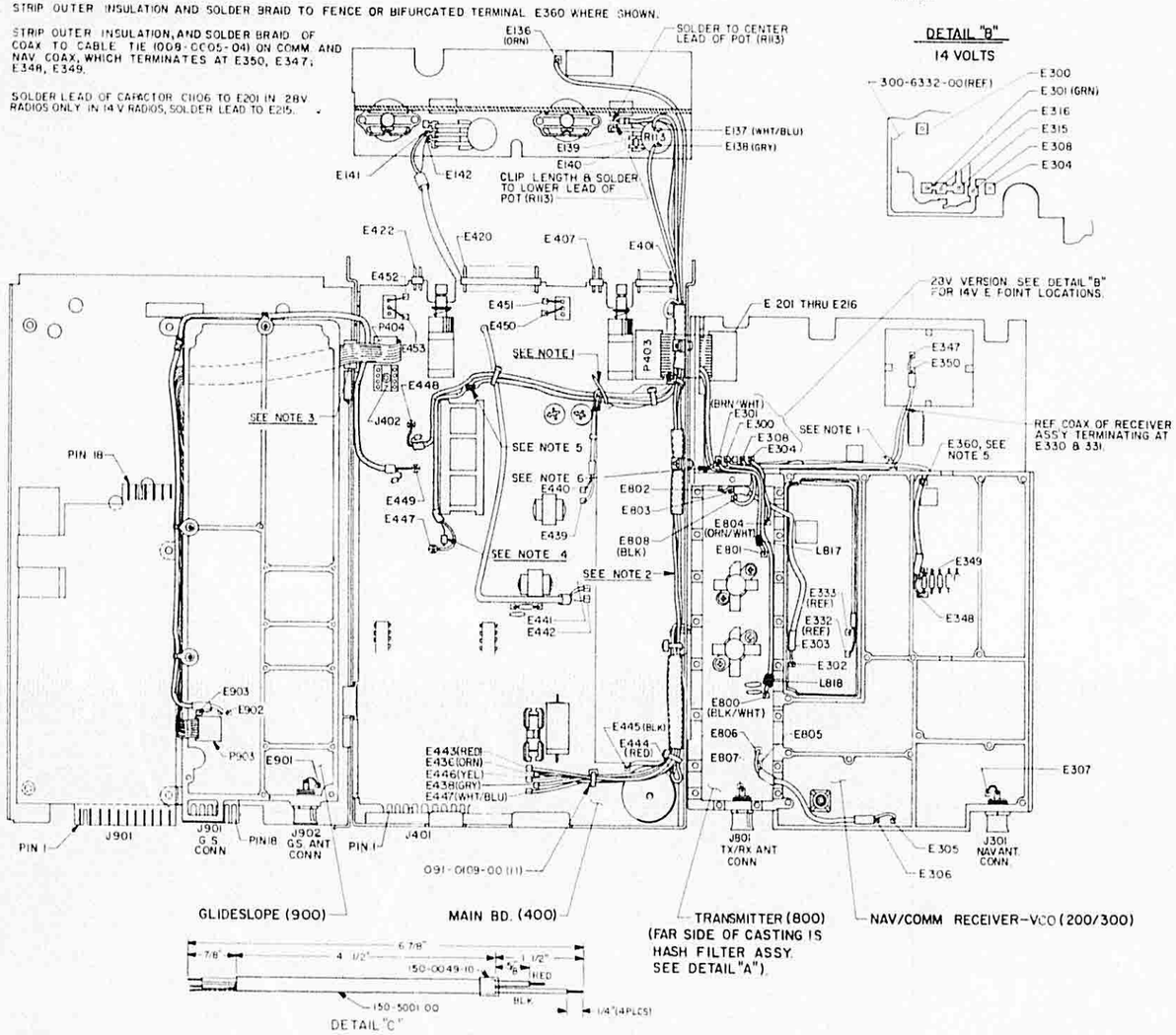

DETAIL "C"

FIGURE 6-2D KX 155 FINAL ASSEMBLY
(Dwg. No. 300-02486-0000, R-25)
(Sheet 2 of 3)

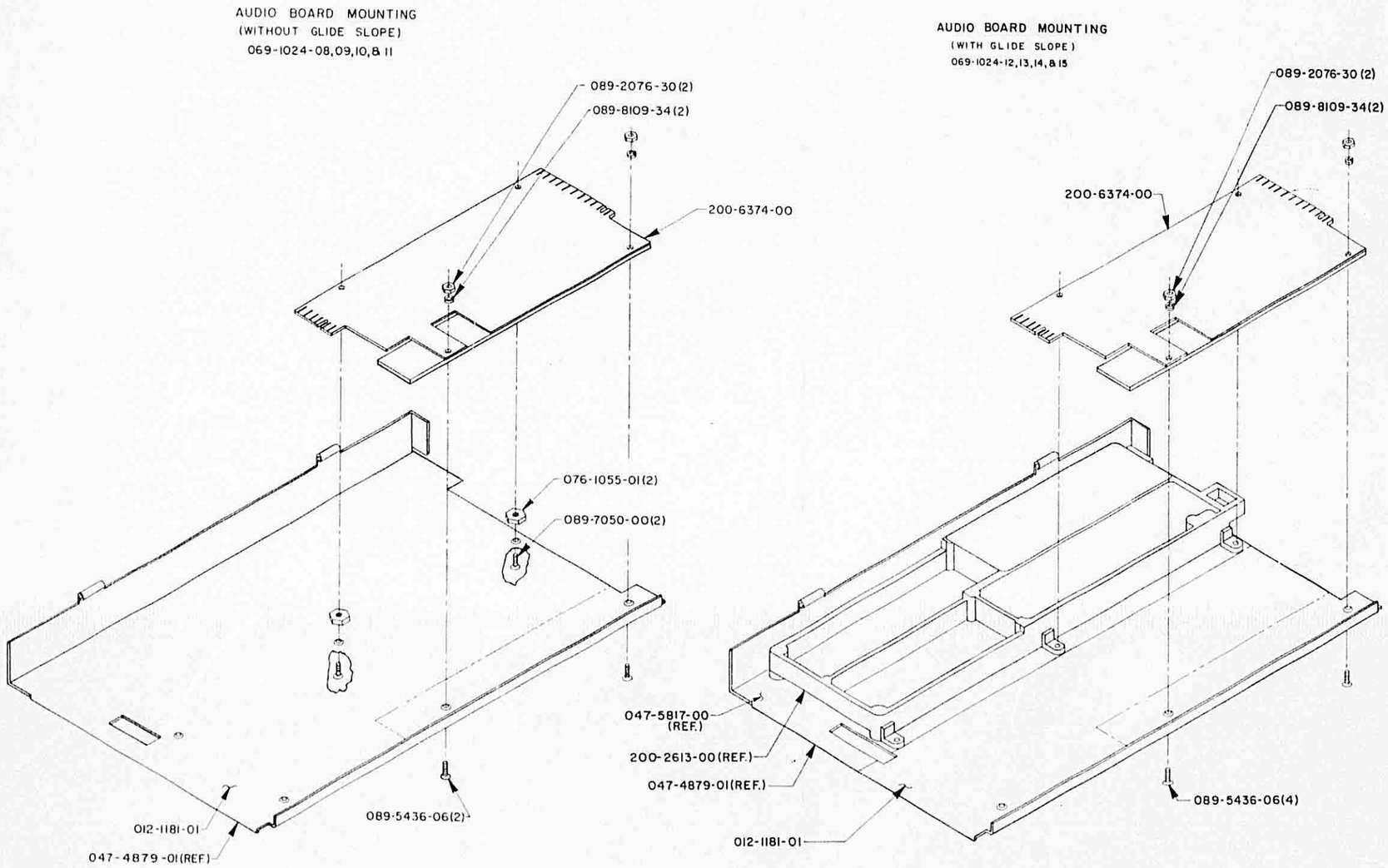

FIGURE 6-2D KX 155 FINAL ASSEMBLY
(Dwg. No. 300-02486-0000, R-25)
(Sheet 3 of 3)

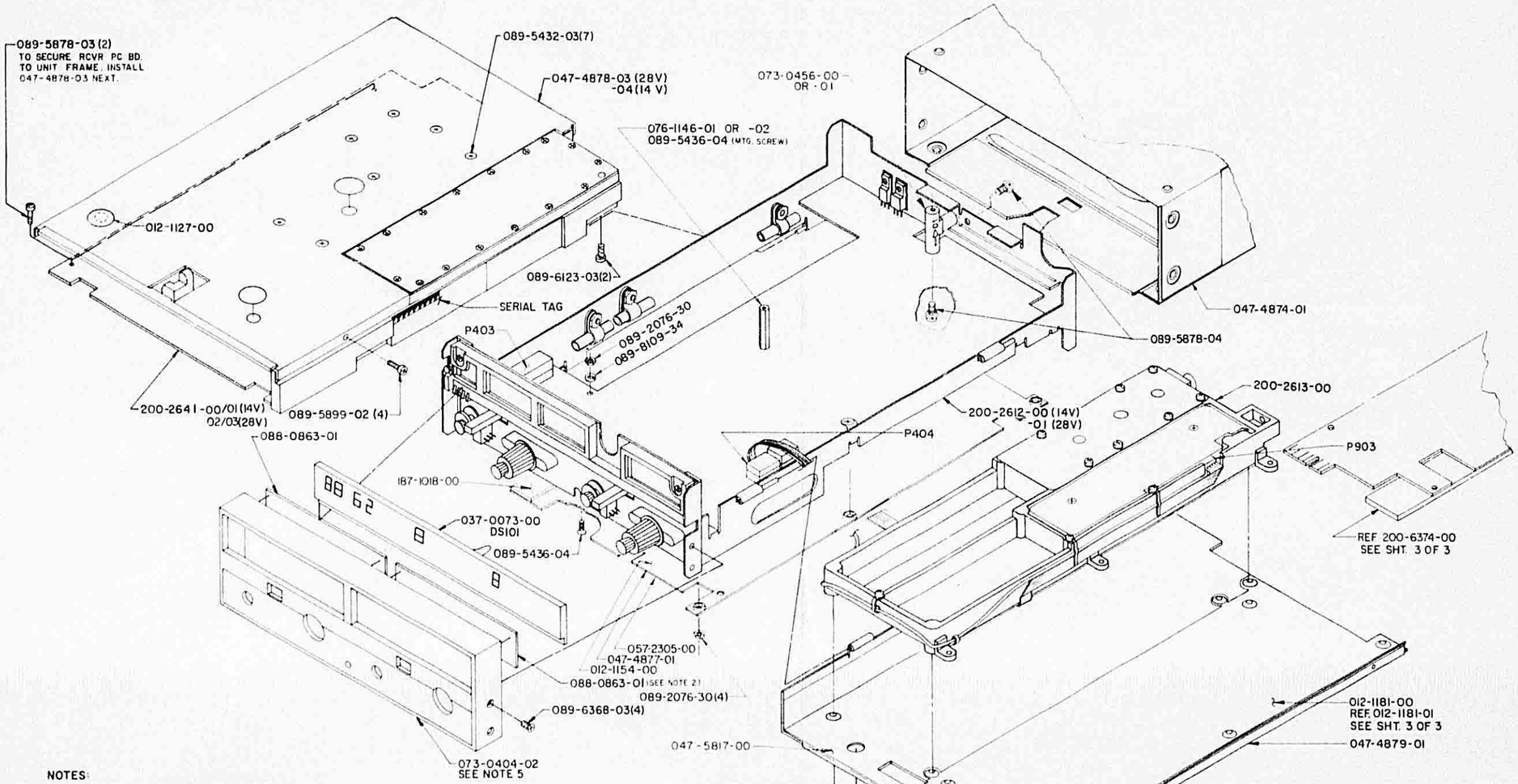

NOTES:

(1) USE LIQUID STAKING COMPOUND FOR ALL FASTENER WHERE LOCKWASHERS, ETC. ARE NOT USED.(016-1008-04).

(2) BOND LENS TO FRONT PANEL WITH ADHESIVE 016-1131-00 FURTHER RETENTION OF LENS MAY BE OBTAINED BY SLIGHTLY UPSETTING THE TENONS WHICH PROJECT FROM THE PANEL THROUGH THE LENS.

(3) APPLY SMALL AMOUNT OF LUBRICANT 016-1053-01 TO HINGE PINS.

(4) MANUFACTURING WILL APPLY (057-2311-00 14 V & 057-2311-01 28V) VOLTAGE DECAL TO FRONT PANEL PROTECTIVE COVER.

(5) FRONT PANEL ASSY 200-2911-00 IS AVAILABLE WITH LENS SECURED IN PANEL.

(6) APPLY 012-1127-00 TAG CYR TO ALL UNUSED SCREW HOLES AND ALL ALIGNMENT HOLES.

FIGURE 6-2C KX 155 FINAL ASSEMBLY
(Dwg. No. 300-02486-0000, R-22)
(Sheet 1 of 3)

NOTES

1. WIRE TIE DOWN IS 026-0001-00,26 GA. BUSS WIRE WITH 150-0003-10, INSULATIVE SLEEVING.
2. WATCH FOR PINCHING OF WIRES BETWEEN CAP & UNIT FRAME.
3. FOLD FLEX CABLE PROPERLY TO AVOID PINCHING (ALL FLEX CABLES)
4. SOLDER GROUND WIRE OF 150-0103-00, COAX TERMINATION, TO 008-0104-00, P.C BD. TERMINATION CLIP, FOR GOOD GROUNDING, TYPICAL.
5. STRIP OUTER INSULATION AND SOLDER BRAID TO FENCE OR BIFURCATED TERMINAL E360 WHERE SHOWN.
6. STRIP OUTER INSULATION, AND SOLDER BRAID OF COAX TO CABLE TIE (008-0005-04) ON COMM. AND NAV. COAX, WHICH TERMINATES AT E350, E347; E348, E349.
7. SOLDER LEAD OF CAPACTOR C1106 TO E201 IN 28V RADIOS ONLY. IN 14V RADIOS, SOLDER LEAD TO E215.

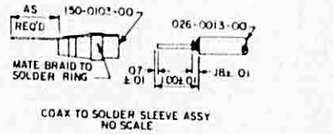

COAX TO SOLDER SLEEVE ASSY
NO SCALE

DETAIL "B"
14 VOLTS

WIRING DIAGRAM (14 & 28V)					
FROM	TO	DESCRIPTION	KPN	FEET	VOLTS
E136	E436	26 ORN	025-0001-03	1.25	14,28
E137	E437	18 BLU/WHT	025-0005-16	1.16	14,28
E138	E438	18 GRY	025-0005-08	1.16	14,28
E139/E140	E439/E440	COAX RG178	026-0013-00	.63	14,28
E300	E800	20 BLK/WHT	025-0004-10	.52	14
E141/E142	E441/E442	COAX RG178	026-0013-00	.70	14,28
E201	E445	20 BLK	025-0004-00	.75	14,28
E202	E443	18 RED	025-0005-02	.95	14,28
E203	E446	26 YEL	025-0001-04	1.00	14,28
E207	E444	20 RED/WHT	025-0004-12	.58	14,28
E347/E350	E447/GND	COAX RG178	026-0013-00	1.58	14,28
E348/E349	E448/GND	COAX RG178	026-0013-00	1.40	14,28
E449/GND	E902/E903	COAX RG178	026-0013-00	1.50	14,28
E206	E301	20 GRN	025-0004-05	.24	14
E206	E209	20 GRN	025-0004-05	.14	28
E209	E309	20 GRN/WHT	025-0004-15	.14	14,28
E213	E310	26 WHT/YEL	025-0018-94	.20	14,28
E300	E800	20 BLK/WHT	025-0004-10	.46	28
E301	E801	20 BRN/WHT	025-0004-11	.16	28
E302/E303 GND	E802/E803 GND	COAX RG178	026-0013-00	.39	14,28
E304	E804	20 ORN/WHT	025-0004-13	.17	14,28
E305/E306 GND	E805/E806 GND	COAX RG178	026-0013-00	.50	14,28
E308	E808	20 BLK	025-0004-00	.11	14,28
E316	E801	20 BRN/WHT	025-0004-11	.16	14

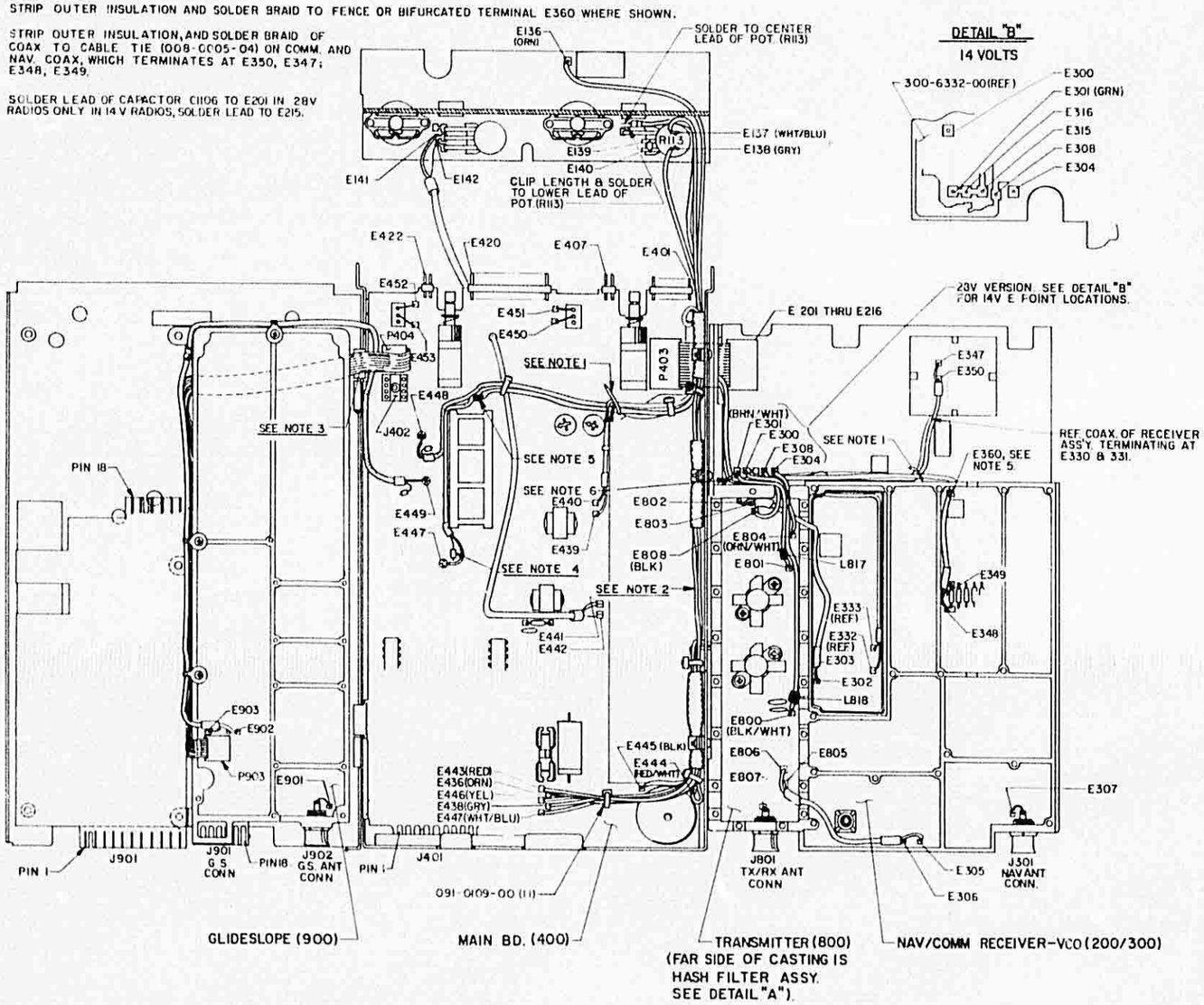

DETAIL "A"

HASH FILTER ASSY.

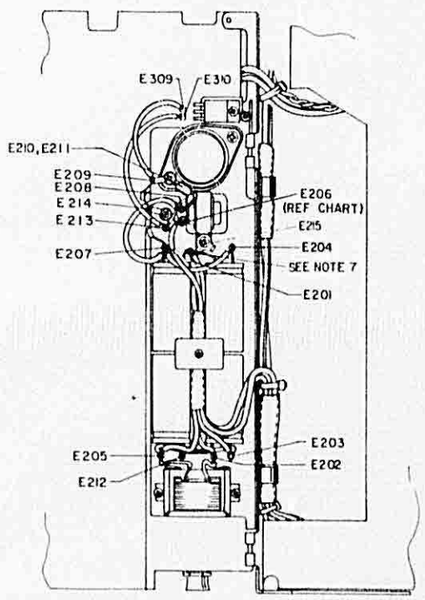

FIGURE 6-2C KX 155 FINAL ASSEMBLY
(Dwg. No. 300-02486-0000, R-22)
(Sheet 2 of 3)

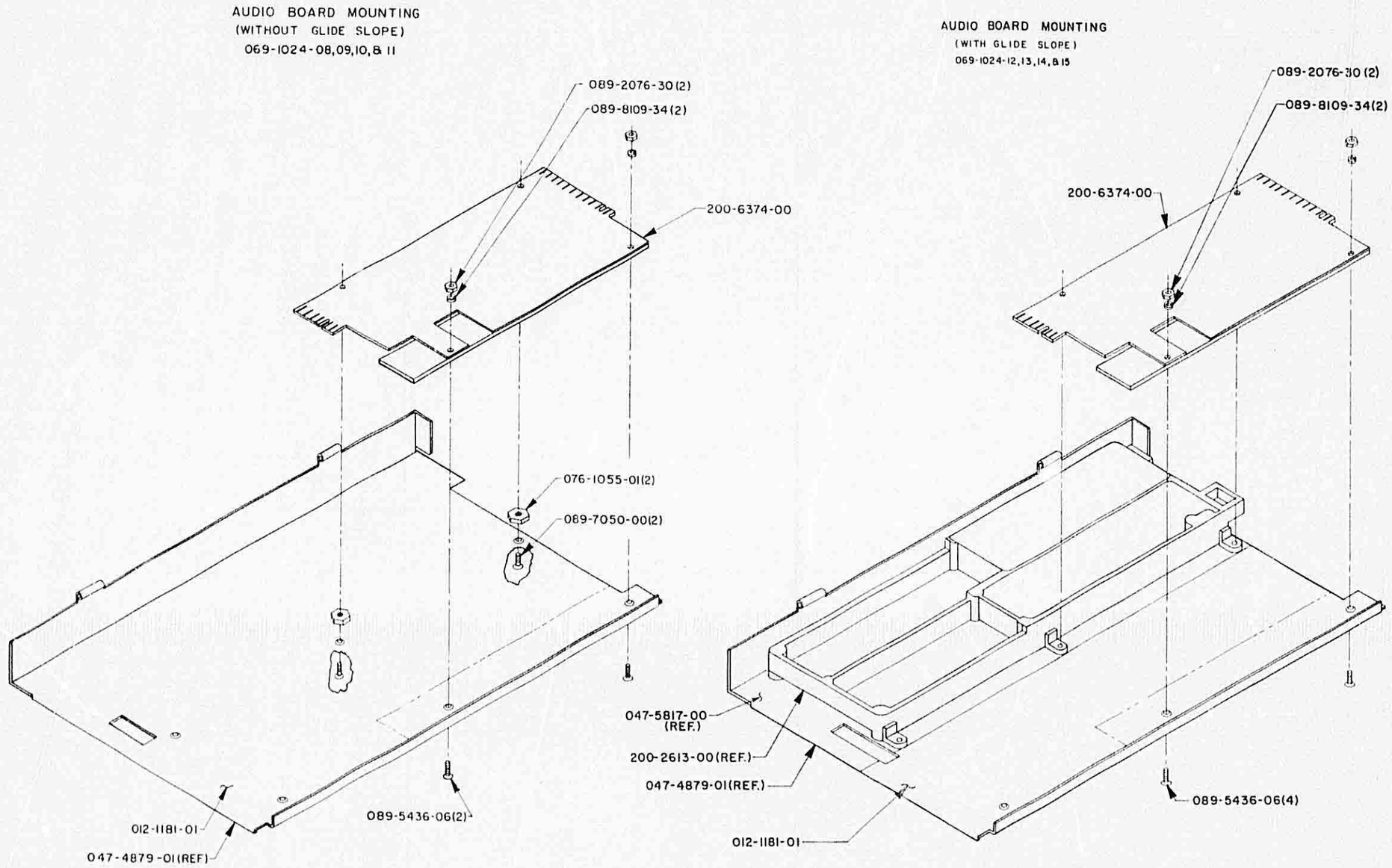

FIGURE 6-2C KX 155 FINAL ASSEMBLY
(Dwg. No. 300-02486-0000, R-22)
(Sheet 3 of 3)

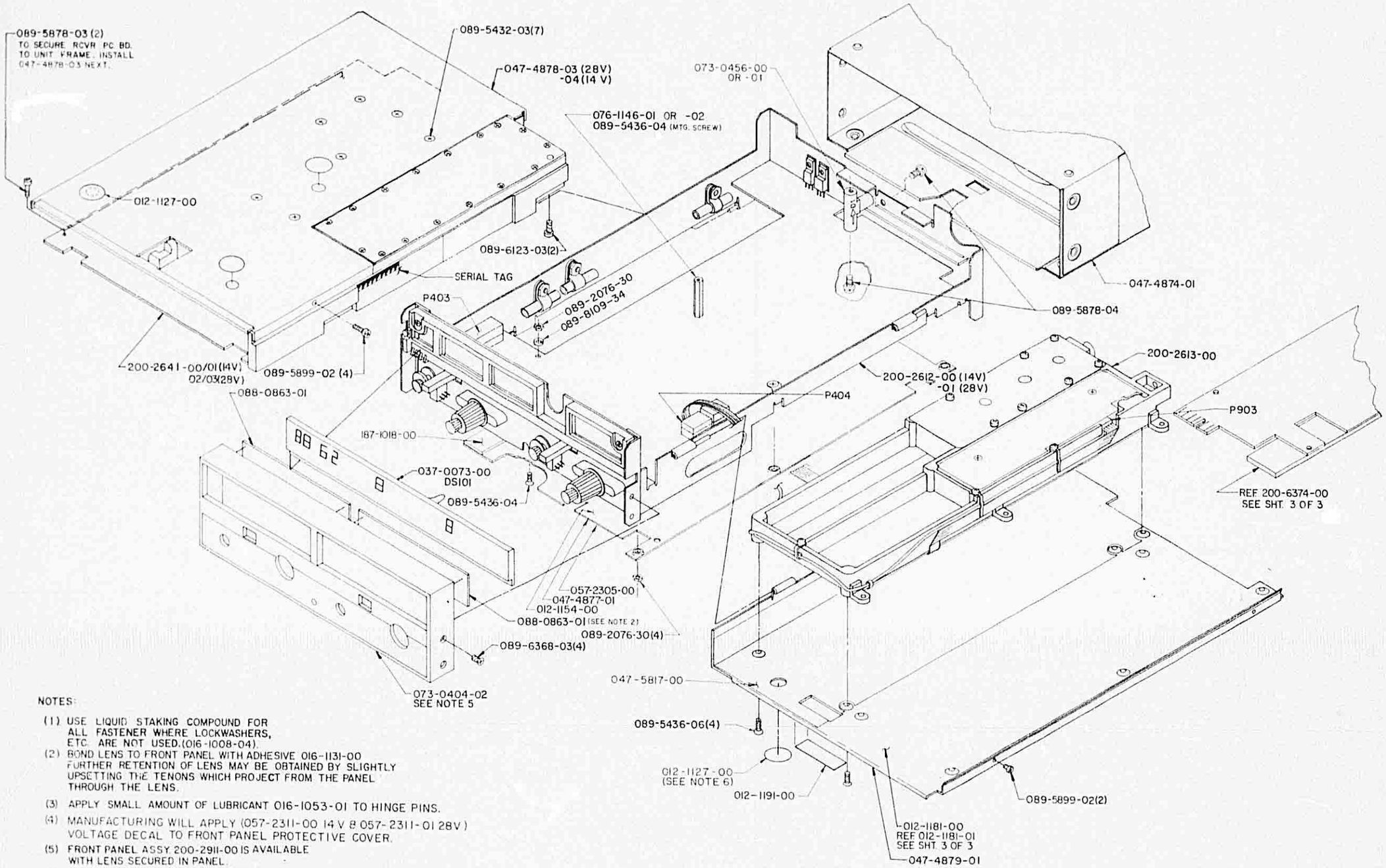

NOTES:

(1) USE LIQUID STAKING COMPOUND FOR ALL FASTENER WHERE LOCKWASHERS, ETC. ARE NOT USED.(016-1008-04).

(2) BOND LENS TO FRONT PANEL WITH ADHESIVE 016-1131-00 FURTHER RETENTION OF LENS MAY BE OBTAINED BY SLIGHTLY UPSETTING THE TENONS WHICH PROJECT FROM THE PANEL THROUGH THE LENS.

(3) APPLY SMALL AMOUNT OF LUBRICANT 016-1053-01 TO HINGE PINS.

(4) MANUFACTURING WILL APPLY (057-2311-00 14 V & 057-2311-01 28V) VOLTAGE DECAL TO FRONT PANEL PROTECTIVE COVER.

(5) FRONT PANEL ASSY. 200-2911-00 IS AVAILABLE WITH LENS SECURED IN PANEL.

(6) APPLY 012-1127-00 TAG CYR TO ALL UNUSED SCREW HOLES AND ALL ALIGNMENT HOLES.

FIGURE 6-2B KX 155 FINAL ASSEMBLY
(Dwg. No. 300-02486-0000, R-20)
(Sheet 1 of 3)

NOTES

1. WIRE TIE DOWN IS 026-0001-00,26 GA. BUSS WIRE WITH 150-0003-10, INSULATIVE SLEEVING.
2. WATCH FOR PINCHING OF WIRES BETWEEN CAP & UNIT FRAME.
3. FOLD FLEX CABLE PROPERLY TO AVOID PINCHING (ALL FLEX CABLES)
4. SOLDER GROUND WIRE OF 150-0103-00, COAX TERMINATION, TO 008-0104-00, PC BD TERMINATION CLIP, FOR GOOD GROUNDING, TYPICAL.
5. STRIP OUTER INSULATION AND SOLDER BRAID TO FENCE OR BIFURCATED TERMINAL E360 WHERE SHOWN.
6. STRIP OUTER INSULATION, AND SOLDER BRAID OF COAX TO CABLE TIE (008-0005-04) ON COMM. AND NAV. COAX, WHICH TERMINATES AT E350, E347; E348, E349.
7. SOLDER LEAD OF CAPACITOR C1106 TO E201 IN 28V RADIOS ONLY. IN 14 V RADIOS, SOLDER LEAD TO E215.

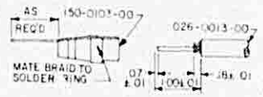

COAX TO SOLDER SLEEVE ASSY
NO SCALE

DETAIL "B"

14 VOLTS

WIRING DIAGRAM (14 & 28V)					
FROM	TO	DESCRIPTION	KPN	FEET	VOLTS
E136	E436	26 ORN	025-0001-03	1.25	14,28
E137	E437	18 BLU/WHT	025-0005-16	1.16	14, 28
E138	E438	18 GRY	025-0005-08	1.16	14, 28
E139/E140	E439/E440	COAX RG178	026-0013-00	.63	14, 28
E300	E800	20 BLK/WHT	025-0004-10	.52	14
E141	E441	26 ORN	025-0001-03	.70	14, 28
E142	E442	26 BLK	025-0001-00	.70	14, 28
E201	E445	20 BLK	025-0004-00	.75	14, 28
E202	E443	18 RED	025-0005-02	.95	14,28
E203	E446	26 YEL	025-0001-04	1.00	14,28
E207	E444	20 RED/WHT	025-0004-12	.58	14,28
E347/E350	E447/GND	COAX RG 178	026-0013-00	1.58	14,28
E348/E349	E448/GND	COAX RG 178	026-0013-00	1.46	14,28
E449/GND	E902/E903	COAX RG 178	026-0013-00	1.50	14,28
E206	E301	20 ORN	025-0004-05	.24	14
E206	E209	20 GRN	025-0004-05	.14	28
E209	E309	20 GRN/WHT	025-0004-15	.14	14, 28
E213	E310	26 WHT/YEL	025-0018-94	.20	14, 28
E300	E800	20 BLK/WHT	025-0004-10	.46	28
E301	E801	20 BRN/WHT	025-0004-11	.16	28
E302/E303 GND	E802/E803 GND	COAX RG 178	026-0013-00	.39	14, 28
E304	E804	20 ORN/WHT	025-0004-13	.17	14, 28
E305/E306 GND	E805/E806 GND	COAX RG 178	026-0013-00	.50	14, 28
E308	E808	20 BLK	025-0004-00	.11	14, 28
E316	E801	20 BRN/WHT	025-0004-11	.16	14

DETAIL "A"

HASH FILTER ASSY.

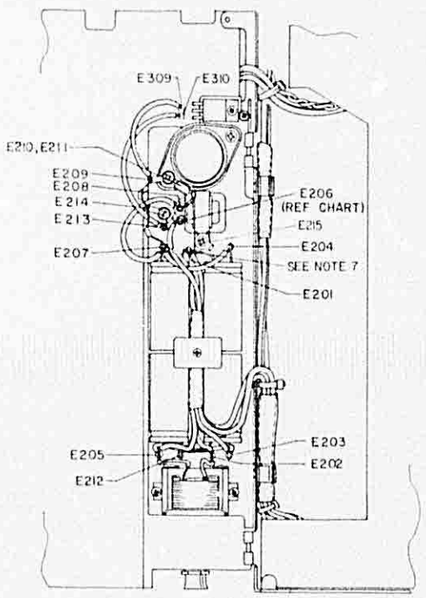

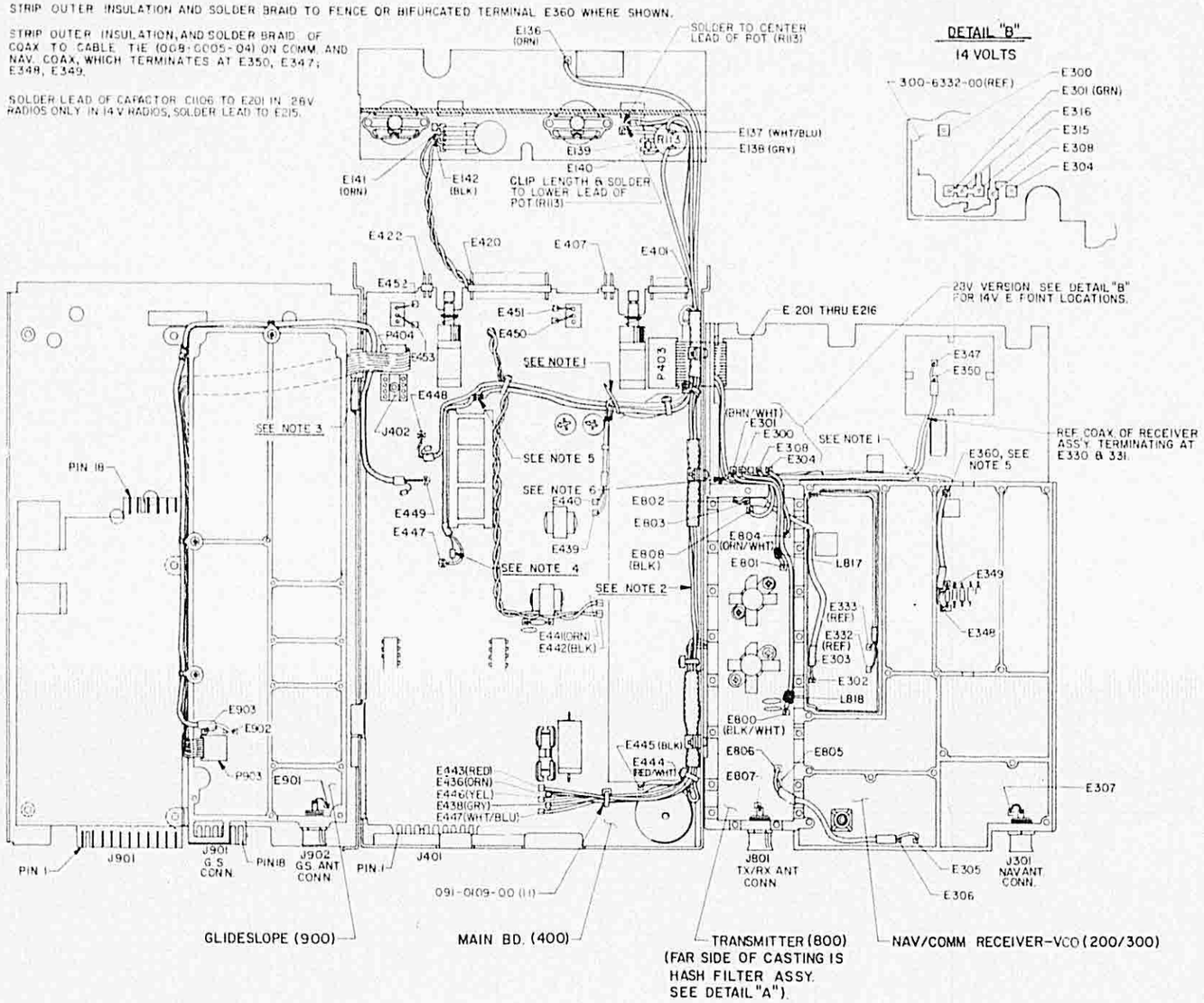

FIGURE 6-2B KX 155 FINAL ASSEMBLY
(Dwg. No. 300-02486-0000, R-20)
(Sheet 2 of 3)

AUDIO BOARD MOUNTING
(WITHOUT GLIDE SLOPE)
069-1024-08,09,10,& 11

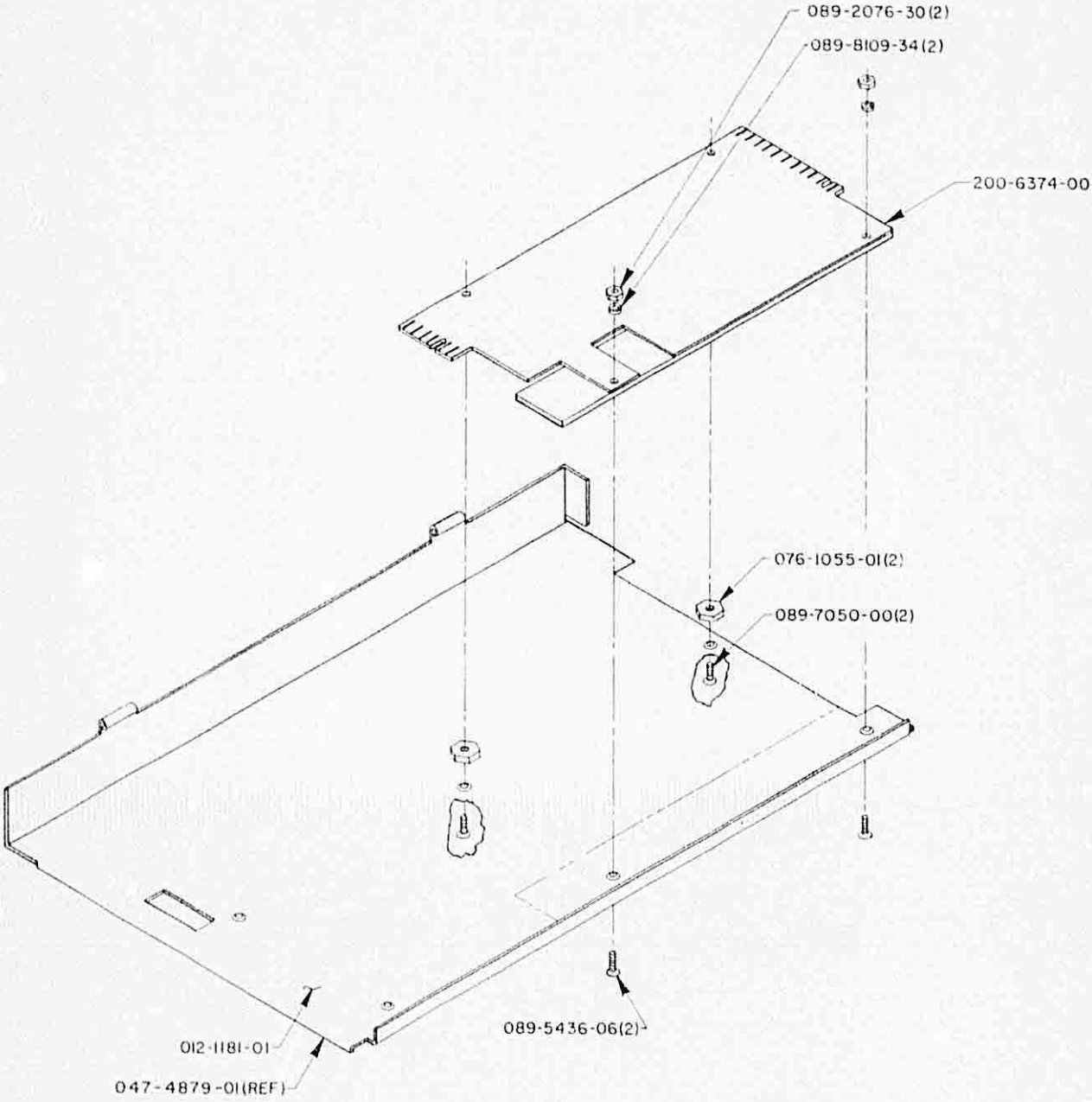

FIGURE 6-2B KX 155 FINAL ASSEMBLY
(Dwg. No. 300-02486-0000, R-20)
(Sheet 3 of 3)

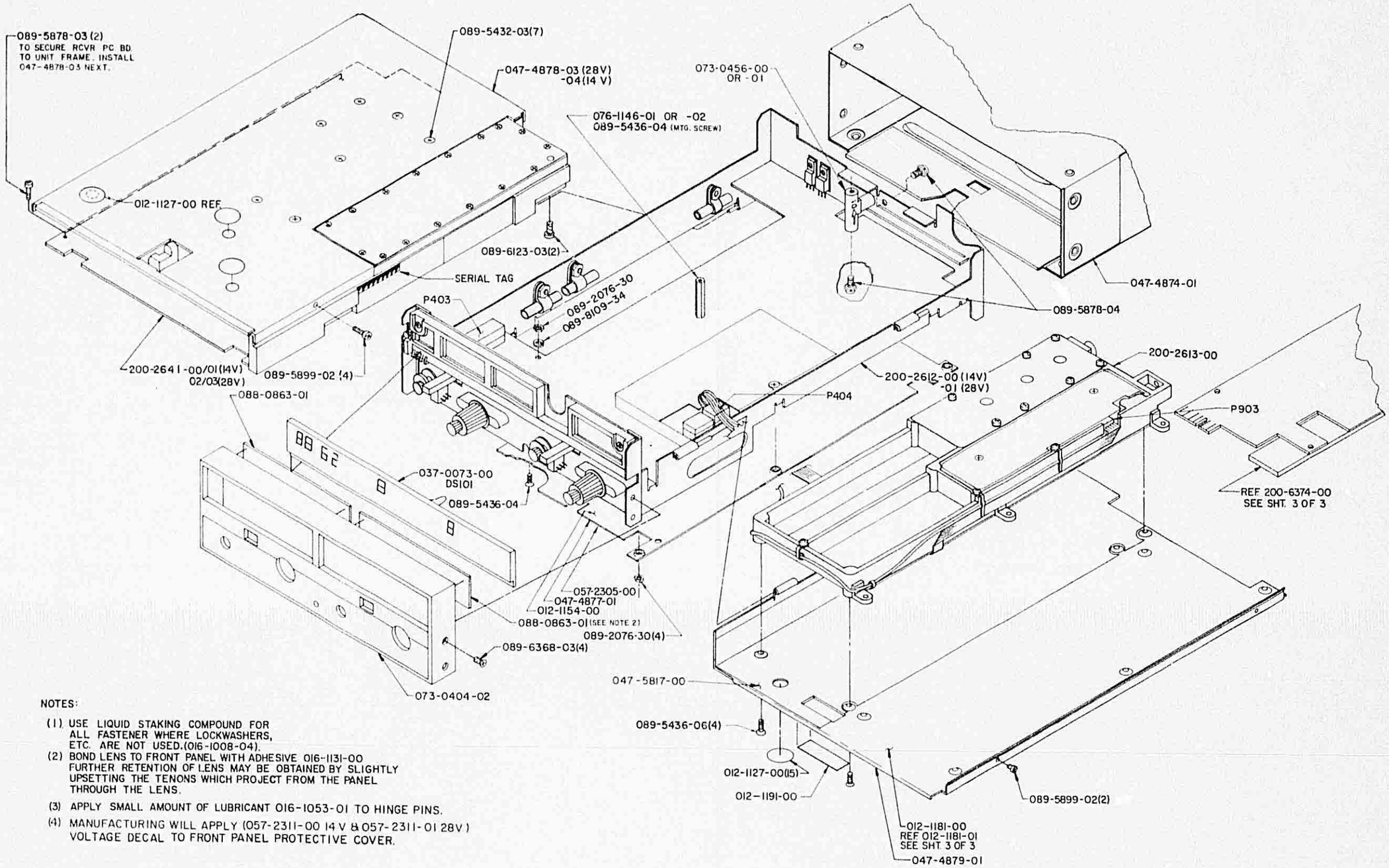

NOTES:

(1) USE LIQUID STAKING COMPOUND FOR ALL FASTENER WHERE LOCKWASHERS, ETC. ARE NOT USED.(016-1008-04).

(2) BOND LENS TO FRONT PANEL WITH ADHESIVE 016-1131-00 FURTHER RETENTION OF LENS MAY BE OBTAINED BY SLIGHTLY UPSETTING THE TENONS WHICH PROJECT FROM THE PANEL THROUGH THE LENS.

(3) APPLY SMALL AMOUNT OF LUBRICANT 016-1053-01 TO HINGE PINS.

(4) MANUFACTURING WILL APPLY (057-2311-00 14 V & 057-2311-01 28V) VOLTAGE DECAL TO FRONT PANEL PROTECTIVE COVER.

FIGURE 6-2A KX 155 FINAL ASSEMBLY
(Dwg. No. 300-02486-0000, R-11)
(Sheet 1 of 3)

NOTES

1. WIRE TIE DOWN IS 026-0001-00, 26 GA. BUSS WIRE WITH 150-0003-10, INSULATIVE SLEEVING.
2. WATCH FOR PINCHING OF WIRES BETWEEN CAP & UNIT FRAME.
3. FOLD FLEX CABLE PROPERLY TO AVOID PINCHING (ALL FLEX CABLES)
4. SOLDER GROUND WIRE OF 150-0103-00, COAX TERMINATION, TO 008-0104-00, PC BD TERMINATION CLIP, FOR GOOD GROUNDING, TYPICAL.
5. STRIP OUTTER INSULATION, AND SOLDER BRAID TO FENCE OR BIFURCATED TERMINAL E360 WHERE SHOWN.
6. STRIP OUTTER INSULATION, AND SOLDER BRAID OF COAX TO CABLE TIE (008-0005-04) ON COMM COAX WHICH TERMINATES AT E350 & E347 AND GLIDESLOPE COAX WHICH TERMINATES AT E902 & E903, SOLDER 2 PLACES

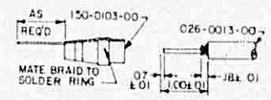

COAX TO SOLDER SLEEVE ASSY
NO SCALE

DETAIL "B"
14 VOLTS

WIRING DIAGRAM (14 & 28V)					
FROM	TO	DESCRIPTION	KPN	FEET	VOLTS
E136	E436	26 ORN	025-0001-03	1.25	14, 28
E137	E437	18 BLU/WHT	025-0005-16	1.16	14, 28
E138	E438	18 GRY	025-0005-08	1.16	14, 28
E139/E140	E439/E440	COAX RG178	026-0013-00	.63	14, 28
E300	E800	20 BLK/WHT	025-0004-10	.52	14
E141	E441	26 ORN	025-0001-03	.70	14, 28
E142	E442	26 BLK	025-0001-00	.70	14, 28
E201	E445	20 BLK	025-0004-00	.75	14, 28
E202	E443	18 RED	025-0005-02	.95	14, 28
E203	E446	26 YEL	025-0001-04	1.00	14, 28
E204	E444	20 RED/WHT	025-0004-12	.58	14, 28
E347/E350	E447/GND	COAX RG 178	026-0013-00	1.58	14, 28
E348/E349	E448/GND	COAX RG 178	026-0013-00	1.46	14, 28
E449/GND	E902/E903	COAX RG 178	026-0013-00	1.50	14, 28
E206	E301	20 GRN	025-0004-05	.24	14
E206	E209	20 GRN	025-0004-05	.14	28
E209	E309	20 GRN/WHT	025-0004-15	.14	14, 28
E213	E310	26 YEL/WHT	025-0018-94	.20	14, 28
E300	E800	20 BLK/WHT	025-0004-10	.46	28
E301	E801	20 BRN/WHT	025-0004-11	.16	28
E302/E303 GND	E802/E803 GND	COAX RG 178	026-0013-00	.39	14, 28
E304	E804	20 ORN/WHT	025-0004-13	.17	14, 28
E305/E306 GND	E805/E806 GND	COAX RG 178	026-0013-00	.50	14, 28
E308	E808	20 BLK	025-0004-00	.11	14, 28
E316	E801	20 BRN/WHT	025-0004-11	.16	14

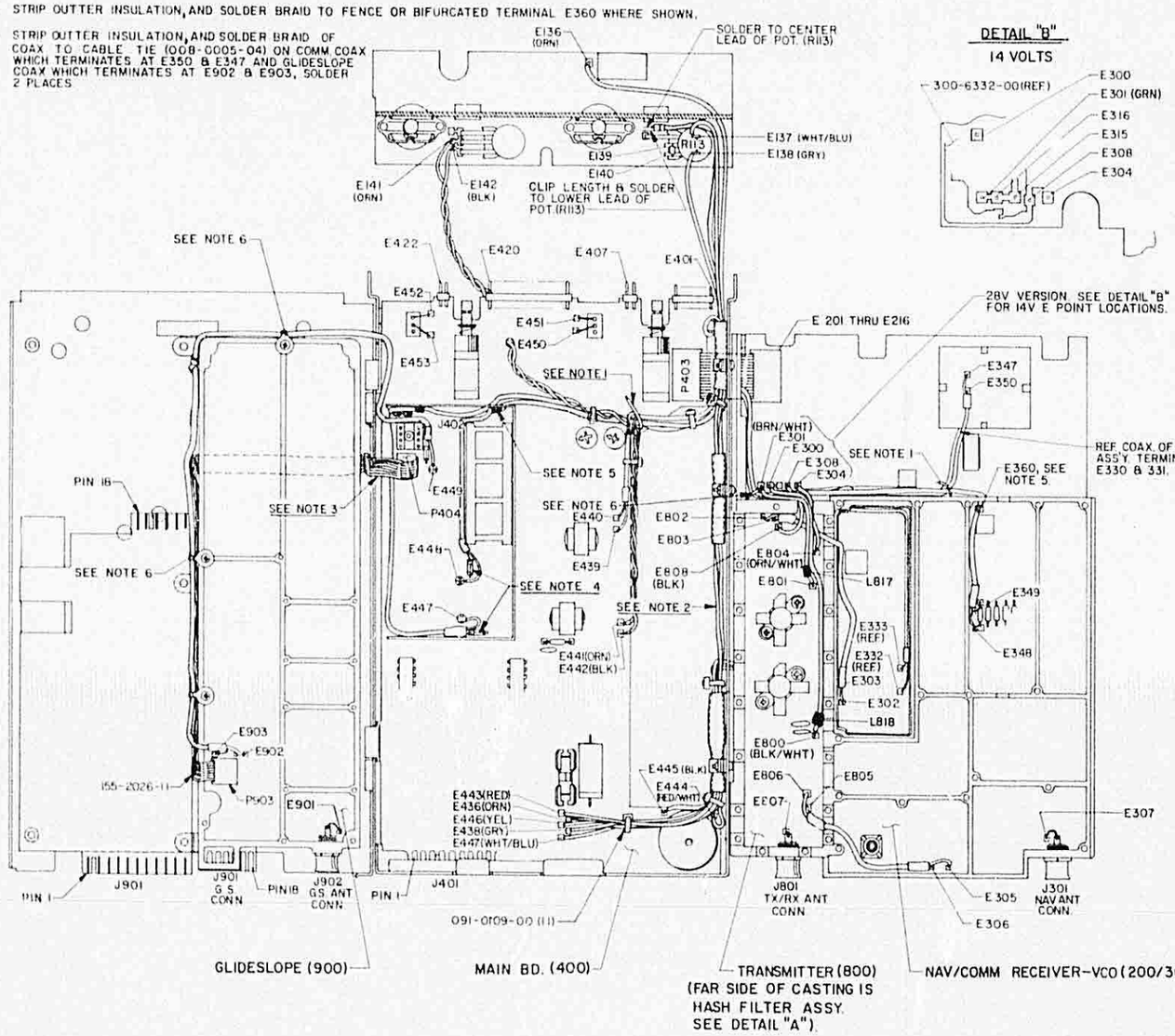

DETAIL "A"

HASH FILTER ASSY.

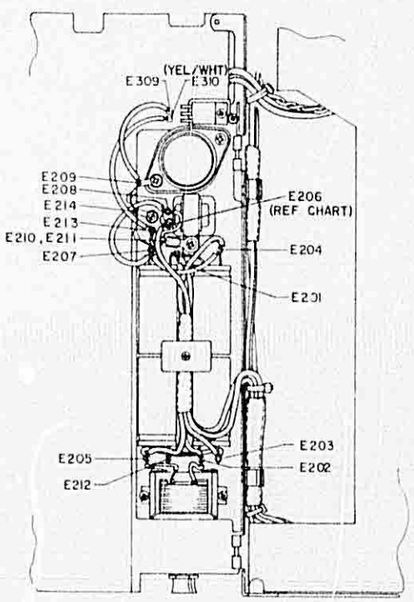

FIGURE 6-2A KX 155 FINAL ASSEMBLY
(Dwg. No. 300-02486-0000, R-11)
(Sheet 2 of 3)

AUDIO BOARD MOUNTING
(WITHOUT GLIDE SLOPE)
069-1024-08,09,10,& 11

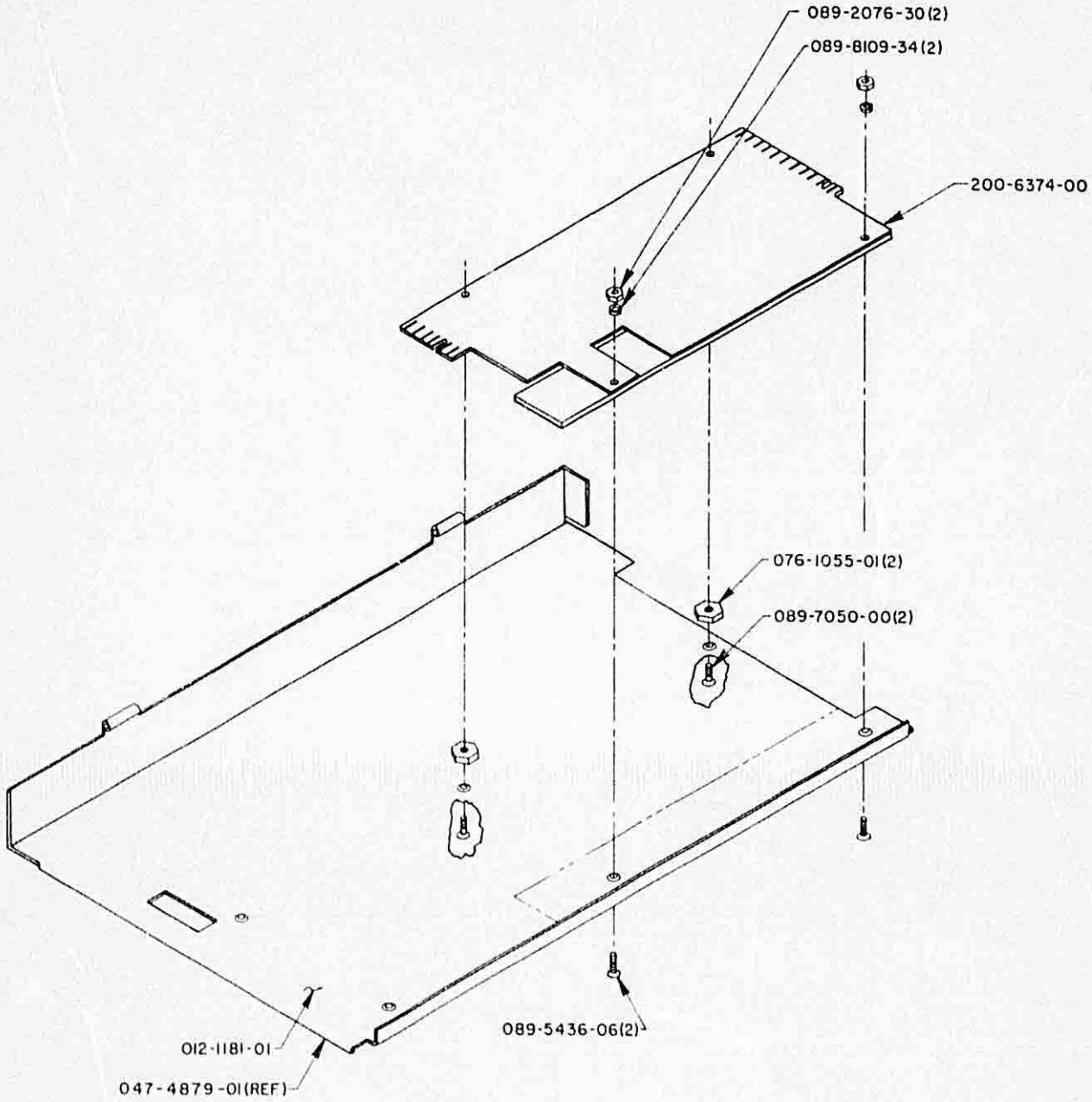

FIGURE 6-2A KX 155 FINAL ASSEMBLY
(Dwg. No. 300-02486-0000, R-11)
(Sheet 3 of 3)

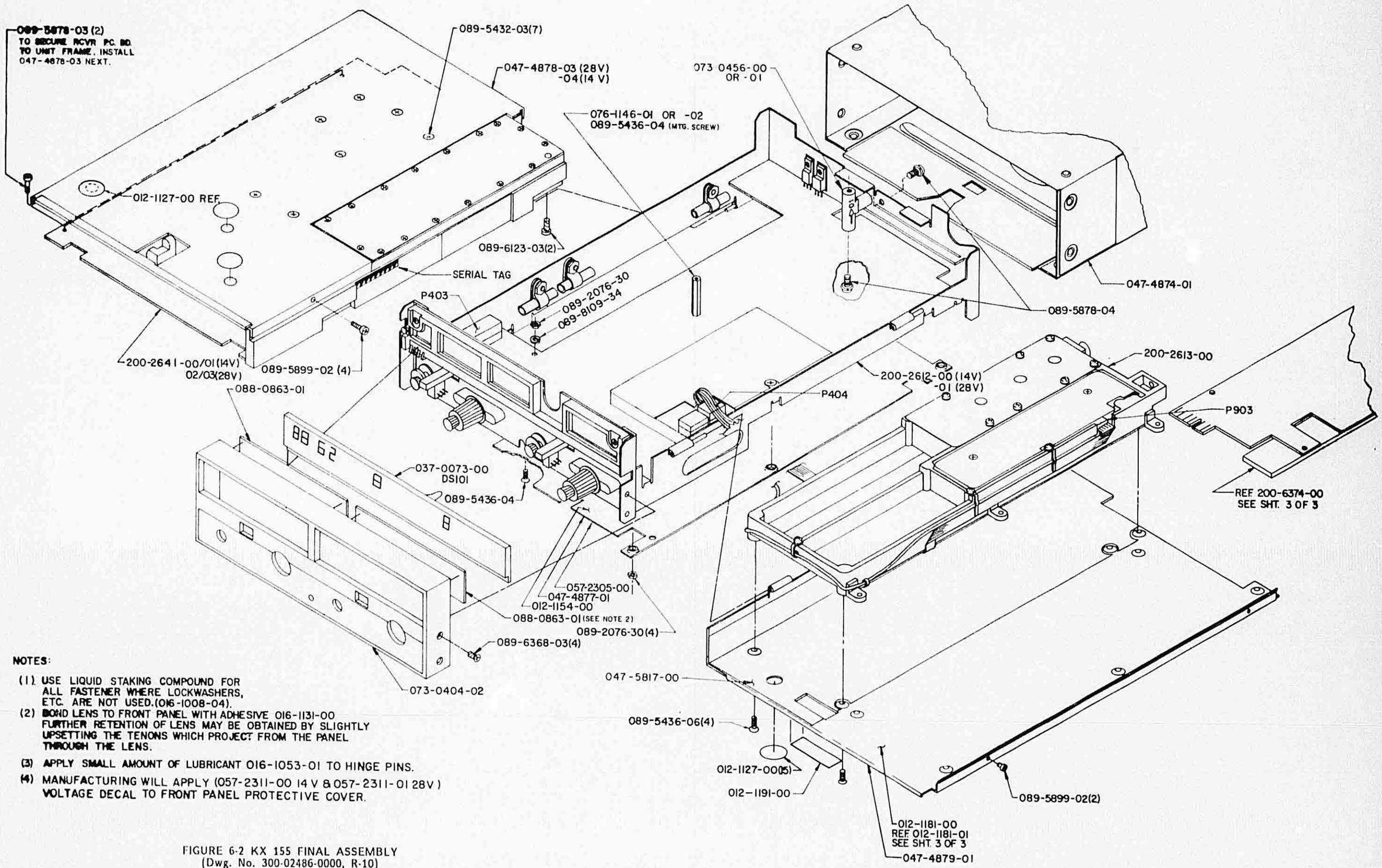

NOTES:

(1) USE LIQUID STAKING COMPOUND FOR ALL FASTENER WHERE LOCKWASHERS, ETC. ARE NOT USED.(016-1008-04).

(2) BOND LENS TO FRONT PANEL WITH ADHESIVE 016-1131-00 FURTHER RETENTION OF LENS MAY BE OBTAINED BY SLIGHTLY UPSETTING THE TENONS WHICH PROJECT FROM THE PANEL THROUGH THE LENS.

(3) APPLY SMALL AMOUNT OF LUBRICANT 016-1053-01 TO HINGE PINS.

(4) MANUFACTURING WILL APPLY (057-2311-00 14 V & 057-2311-01 28V) VOLTAGE DECAL TO FRONT PANEL PROTECTIVE COVER.

FIGURE 6-2 KX 155 FINAL ASSEMBLY
(Dwg. No. 300-02486-0000, R-10)
(Sheet 1 of 3)

NOTES:

1. WIRE TIE DOWN IS 026-0001-00,26 GA. BUSS WIRE WITH 150-0003-10, INSULATIVE SLEEVING.
2. WATCH FOR PINCHING OF WIRES BETWEEN CAP & UNIT FRAME.
3. FOLD FLEX CABLE PROPERLY TO AVOID PINCHING (ALL FLEX CABLES)
4. SOLDER GROUND WIRE OF 150-0103-00, COAX TERMINATION, TO 008-0104-00, PC BD TERMINATION CLIP, FOR GOOD GROUNDING, TYPICAL.
5. STRIP OUTTER INSULATION, AND SOLDER BRAID TO FENCE OR BIFURCATED TERMINAL E360 WHERE SHOWN.
6. STRIP OUTTER INSULATION, AND SOLDER BRAID OF COAX TO CABLE TIE (008-0005-04) ON COMM. COAX WHICH TERMINATES AT E350 & E347 AND GLIDESLOPE COAX WHICH TERMINATES AT E902 & E903, SOLDER 2 PLACES.
7. SOLDER LEAD OF CAPACTOR C1106 TO E201 IN 28V RADIOS ONLY. IN 14 V RADIOS, SOLDER LEAD TO E215.

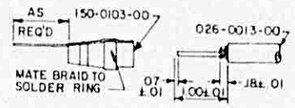

COAX TO SOLDER SLEEVE ASSY
NO SCALE

DETAIL "B"

14 VOLTS

WIRING DIAGRAM (14 & 28V)					
FROM	TO	DESCRIPTION	KPN	FEET	VOLTS
E 136	E436	26 ORN	025-0001-03	1.25	14, 28
E 137	E 437	18 BLU/WHT	025-0005-16	1.16	14, 28
E 138	E 438	18 GRY	025-0005-08	1.16	14, 28
E139/E140	E439/E440	COAX RG178	026-0013-00	.63	14, 28
E300	E800	20BLK/WHT	025-0004-10	.52	14
E 141	E441	26 ORN	025-0001-03	.70	14, 28
E 142	E442	26 BLK	025-0001-00	.70	14, 28
E 201	E445	20 BLK	025-0004-00	.75	14, 28
E 202	E443	18 RED	025-0005-02	.95	14, 28
E 203	E446	26 YEL	025-0001-04	1.00	14, 28
E 207	E444	20 RED/WHT	025-0004-12	.58	14, 28
E347/E350	E447/GND	COAX RG 178	026-0013-00	1.58	14, 28
E348/E349	E448/GND	COAX RG 178	026-0013-00	1.46	14, 28
E449/GND	E902/E903	COAX RG 178	026-0013-00	1.50	14, 28
E 206	E301	20 GRN	025-0004-05	.24	14
E 206	E209	20 GRN	025-0004-05	.14	28
E 209	E309	20 GRN/WHT	025-0004-15	.14	14, 28
E 213	E310	26 WHT/YEL	025-0018-94	.20	14, 28
E 300	E800	20 BLK/WHT	025-0004-10	.46	28
E301	E801	20 BRN/WHT	025-0004-11	.16	28
E 302/E303 GND	E802/E803 GND	COAX RG 178	026-0013-00	.39	14, 28
E304	E804	20 ORN/WHT	025-0004-13	.17	14, 28
E305/E306 GND	E805/E806 GND	COAX RG 178	026-0013-00	.50	14, 28
E308	E808	20 BLK	025-0004-00	.11	14, 28
E316	E801	20 BRN/WHT	025-0004-11	.16	14

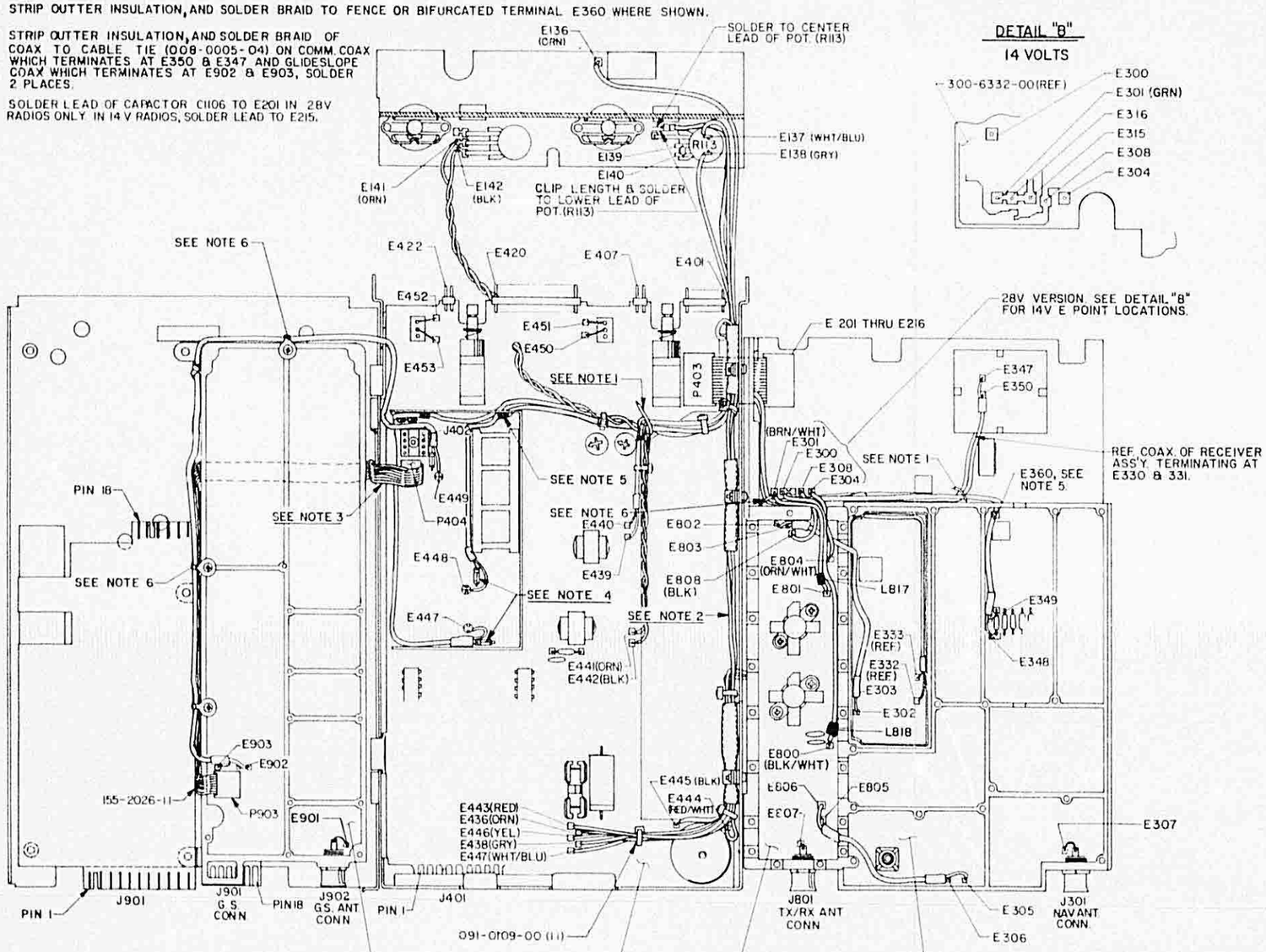

DETAIL "A"

HASH FILTER ASSY.

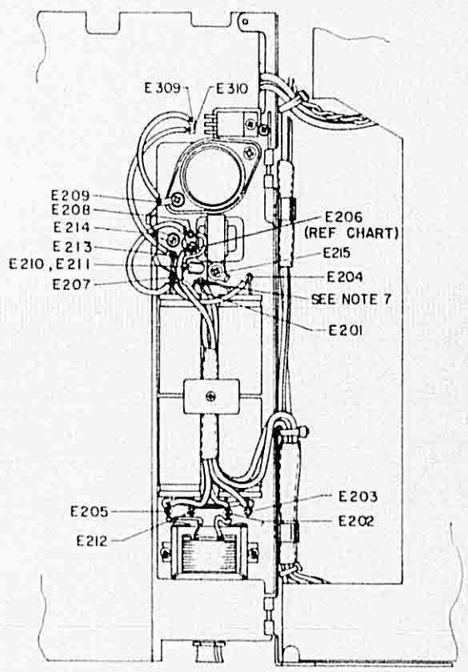

FIGURE 6-2 KX 155 FINAL ASSEMBLY
(Dwg. No. 300-02486-0000, R-10)
(Sheet 2 of 3)

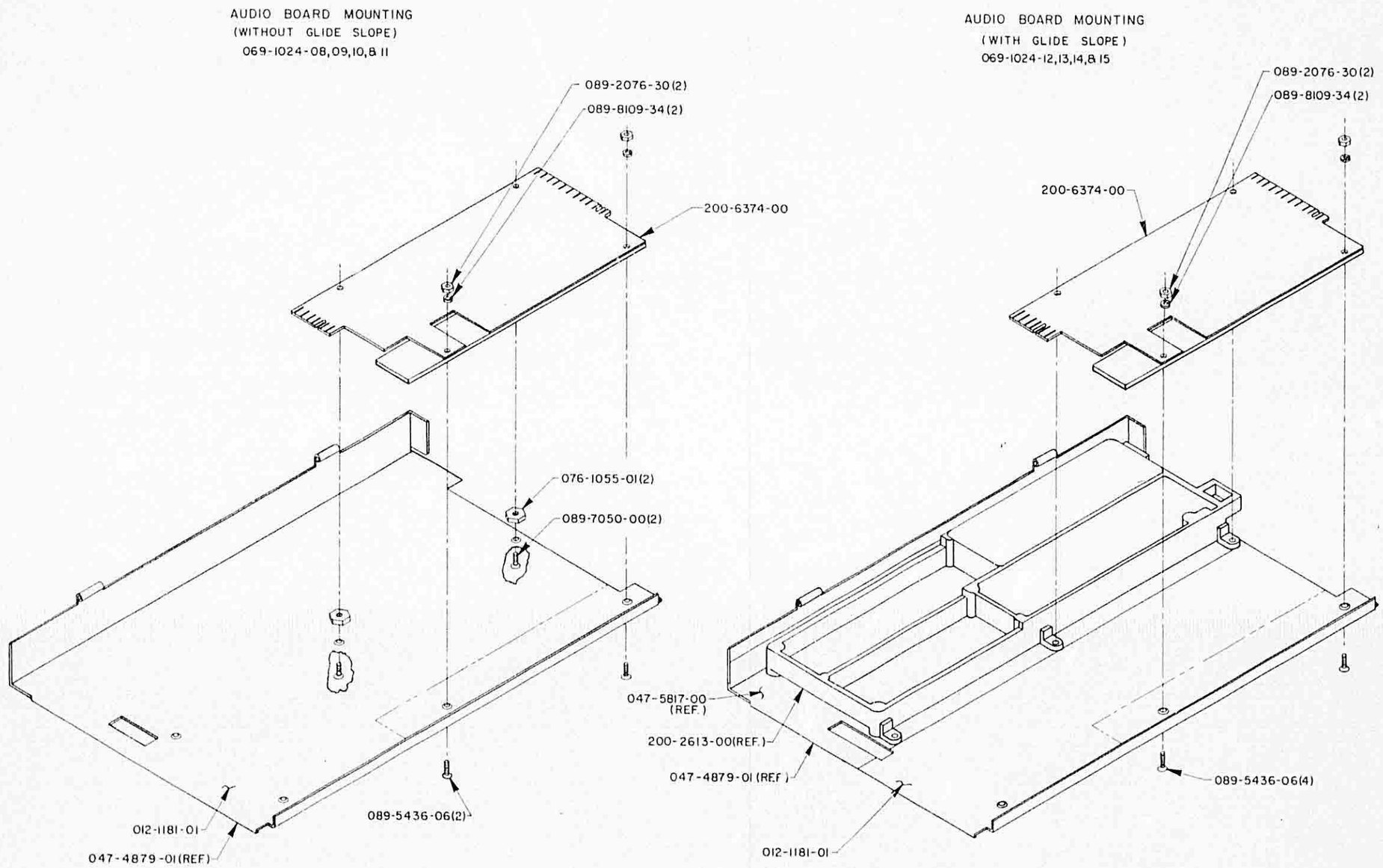

FIGURE 6-2 KX 155 FINAL ASSEMBLY
(Dwg. No. 300-02486-0000, R-10)
(Sheet 3 of 3)

069-01025-0000	NAV/COM/BRG/14V	Rev 18	KX 165
069-01025-0001	NAV/COM/BRG/GS/14V	Rev 20	KX 165
069-01025-0002	N/C-BRG/14V 50KHZ	Rev 18	KX 165
069-01025-0003	N/C-BRG/GS/14V/50K	Rev 20	KX 165
069-01025-0004	NAV/COM/BRG/28V	Rev 18	KX 165
069-01025-0005	NAV/COM/BRG/GS/28V	Rev 20	KX 165
069-01025-0099	COMMON BOM	Rev 14	KX 165

SYMBOL	CAS PART NBR	DESCRIPTION	[UOM]	-0000	-0001	-0002	-0003	-0004	-0005	-0099
-	012-01002-0000	TAPE .250W	[IN]	.	.	.	.	.	.	2
-	012-01005-0003	TAPE MYLAR .250 W	[IN]	.	.	.	.	.	.	0.394
-	012-01021-0006	TAPE ELEC 3/8 WD	[IN]	.	.	.	.	.	.	1
-	012-01038-0000	ADHESIVE DISC	[EA]	.	.	.	.	.	.	1
-	012-01127-0000	TAG COVER	[EA]	4	.	4	.	4	.	16
-	012-01154-0000	INSUL CNT SHLD	[EA]	.	.	.	.	.	.	1
-	012-01181-0000	TOP COVER INSUL	[EA]	.	.	.	.	.	.	1
-	012-01191-0000	TAG COVER	[EA]	.	.	.	.	.	.	1
-	016-01008-0004	GLYPTAL 7526 BL	[AR]	.	.	.	.	.	.	0
-	016-01053-0000	INS GRS MIL G3278	[AR]	.	.	.	.	.	.	0
-	016-01131-0000	CONTACT CEMENT	[AR]	.	.	.	.	.	.	0
-	025-00001-0003	WIRE 26 ORN	[IN]	.	.	.	.	.	.	15
-	025-00001-0004	WIRE 26 YEL	[IN]	.	.	.	.	.	.	8.5
-	025-00004-0000	WIRE 20 BLK	[IN]	.	.	.	.	.	.	3
-	025-00004-0005	WIRE 20 GRN	[IN]	1.2	1.2	1.2	1.2	.	.	1.7
-	025-00004-0010	WIRE 20 BK/WH	[IN]	0.8	0.8	0.8	0.8	.	.	5.6
-	025-00004-0011	WIRE 20 BN/WH	[IN]	.	.	.	.	.	.	2
-	025-00004-0013	WIRE 20 OR/WH	[IN]	.	.	.	.	.	.	2.1
-	025-00004-0015	WIRE 20 GN/WH	[IN]	.	.	.	.	.	.	1.7
-	025-00005-0002	WIRE 18 RED	[IN]	.	.	.	.	.	.	7
-	025-00005-0008	WIRE 18 GRY	[IN]	.	.	.	.	.	.	14
-	025-00005-0016	WIRE 18 BU/WH	[IN]	.	.	.	.	.	.	14
-	025-00024-0004	WIRE 22AWG YEL	[IN]	.	.	.	.	.	.	2.4
-	025-05012-0000	WIRE 2C SHD WHTBLK	[IN]	.	.	.	.	.	.	7
-	026-00001-0000	WIRE CU 26AWG TINNE	[AR]	.	.	.	.	.	.	0
-	026-00013-0000	WIRE COAX RG-178B/U	[IN]	.	.	.	.	.	.	63.12
-	035-01361-0016	PROTECTIVE COVER	[EA]	.	.	.	.	.	.	1
-	047-04874-0001	MTG RACK	[EA]	.	.	.	.	.	.	1
-	047-04877-0001	CNTR SHLD	[EA]	.	.	.	.	.	.	1
-	047-04878-0003	BTM CVR W/F&H 28V	[EA]	.	.	.	.	.	.	1
-	047-04879-0001	TOP COVER	[EA]	.	.	.	.	.	.	1
-	047-05189-0001	GUIDE PIN LUG VOR	[EA]	1	.	1	.	1	.	.
-	047-05817-0000	RADIATION SHIELD	[EA]	.	1	.	1	.	1	.
-	057-02203-1000	S/N TAG FLVR BLK	[EA]	1	.	.	.	.	.	.

SYMBOL	CAS PART NBR	DESCRIPTION	[UOM]	-0000	-0001	-0002	-0003	-0004	-0005	-0099
_	057-02203-1001	S/N TAG FLVR BLK	[EA]	.	1	.	.	.	.	.
_	057-02203-1002	S/N TAG FLVR BLK	[EA]	.	.	1	.	.	.	.
_	057-02203-1003	S/N TAG FLVR BLK	[EA]	.	.	.	1	.	.	.
_	057-02203-1004	S/N TAG FLVR BLK	[EA]	.	.	.	.	1	.	.
_	057-02203-1005	S/N TAG FLVR BLK	[EA]	.	.	.	.	.	1	.
_	057-02305-0000	CNTR SHLD INFO DCL	[EA]	.	.	.	.	.	.	1
_	057-02311-0000	VOLTAGE TAG 14V	[EA]	1	1	1	1	.	.	.
_	057-02311-0001	VOLTAGE TAG 28V	[EA]	.	.	.	.	1	1	.
_	057-02312-0000	DECAL	[EA]	.	.	1	1	.	.	.
_	057-02314-0002	S/N TAG	[EA]	.	1	.	1	.	1	.
_	057-02314-0003	S/N TAG	[EA]	1	.	1	.	1	.	.
_	057-03187-0000	FCC LABEL	[EA]	.	.	.	.	.	.	1
_	069-01025-0099	COMMON BOM	[EA]	1	1	1	1	1	1	.
_	073-00404-0003	FRONT PANEL CSTG	[EA]	.	.	.	.	.	.	1
_	073-00456-0000	PC BD SPCR	[EA]	.	.	.	.	.	.	1
_	076-01055-0001	SPCR	[EA]	1	.	1	.	1	.	4
_	076-01146-0000	HEX SPACER .860	[EA]	.	.	.	.	.	.	1
_	088-00863-0001	LENS	[EA]	.	.	.	.	.	.	1
_	088-00863-0002	LENS	[EA]	.	.	.	.	.	.	1
_	089-02009-0037	NUT FLAT 4-40	[EA]	.	.	.	.	.	.	5
_	089-02076-0030	NUT FLAT 4-40	[EA]	.	.	.	.	.	.	5
_	089-05432-0004	SCR FHP 2-56X1/4	[EA]	.	.	.	.	.	.	7
_	089-05436-0004	SCR FHP 4-40X1/4	[EA]	.	.	.	.	.	.	2
_	089-05436-0006	SCR FHP 4-40X3/8	[EA]	.	5	.	5	.	5	6
_	089-05878-0003	SCR PHP 4-40X3/16	[EA]	.	.	.	.	.	.	2
_	089-05878-0004	SCR PHP 4-40X1/4	[EA]	.	.	.	.	.	.	1
_	089-05899-0002	SCR PHP 2-56X1/8	[EA]	.	.	.	.	.	.	6
_	089-059[illegible]-0003	SCR PHP 4-40X3/16	[EA]	.	.	.	.	.	.	1
_	089-06123-0003	SCR PHP 4-40X3/16	[EA]	.	.	.	.	.	.	2
_	089-06368-0003	SCR FHP 4-40X3/16	[EA]	.	.	.	.	.	.	4
_	089-07050-0000	SCR FHP 4-40X7/16	[EA]	1	.	1	.	1	.	.
_	089-08109-0034	WSHR SPLT LK #4	[EA]	.	.	.	.	.	.	7
_	091-00109-0000	CABLE TIE .234	[EA]	.	.	.	.	.	.	12
_	150-00003-0010	TUBING TFLN 24AWG	[AR]	.	.	.	.	.	.	0
_	150-00049-0010	TUBING SHRINK WHT	[IN]	.	.	.	.	.	.	1
_	150-00103-0000	SLDR SLEEVE	[EA]	.	.	.	.	.	.	12
_	187-01018-0000	CUSHION RELAY	[EA]	.	.	.	.	.	.	2
_	195-00119-0000	S/N TAG OPTION	[EA]	1	1	1	1	.	.	.
_	195-00119-0001	S/N TAG OPTION	[EA]	.	.	.	.	1	1	.
_	200-02612-0002	MN CHAS KX 165 14V	[EA]	1	1	1	1	.	.	.
_	200-02612-0003	MN CHAS KX 165 28V	[EA]	.	.	.	.	1	1	.
_	200-02613-0000	GLIDESLOPE	[EA]	.	1	.	1	.	1	.

SYMBOL	CAS PART NBR	DESCRIPTION	[UOM]	-0000	-0001	-0002	-0003	-0004	-0005	-0099
_	200-02641-0000	R/T ASSY 14V	[EA]	1	1	.	.	.	.	.
_	200-02641-0001	R/T ASSY 14V 50KHZ	[EA]	.	.	1	1	.	.	.
_	200-02641-0002	R-T ASSY 28V	[EA]	.	.	.	.	1	1	.
_	200-06071-0010	VOR/LOC CONV	[EA]	.	.	.	.	.	.	1
DS 101	037-00073-0000	DISPLAY KX 165	[EA]	.	.	.	.	.	.	1
L 817	013-00006-0001	FERR BEAD	[EA]	.	.	.	.	.	.	1
L 818	013-00006-0001	FERR BEAD	[EA]	.	.	.	.	.	.	1

069-01025-0006	N/C-BRG/28V 50KHZ	Rev 18	KX 165
069-01025-0007	N/C-BRG/GS/28V/50K	Rev 19	KX 165
069-01025-0020	KX165 NAV/ COM	Rev AA	KX 165
069-01025-0021	KX165 NAV/COM	Rev AA	KX 165
069-01025-0022	KX165 NAV/COM	Rev 2	KX 165
069-01025-0099	COMMON BOM	Rev 14	KX 165

SYMBOL	CAS PART NBR	DESCRIPTION	[UOM]	-0006	-0007	-0020	-0021	-0022	-0099
-	008-00005-0004	TND COP LUG	[EA]	.	.	.	1	.	.
-	012-01002-0000	TAPE .250W	[IN]	.	.	.	.	.	2
-	012-01005-0003	TAPE MYLAR .250 W	[IN]	.	.	.	.	.	0.394
-	012-01021-0006	TAPE ELEC 3/8 WD	[IN]	.	.	.	.	.	1
-	012-01038-0000	ADHESIVE DISC	[EA]	.	.	.	.	.	1
-	012-01127-0000	TAG COVER	[EA]	4	.	4	.	4	16
-	012-01154-0000	INSUL CNT SHLD	[EA]	.	.	.	.	.	1
-	012-01181-0000	TOP COVER INSUL	[EA]	.	.	.	.	.	1
-	012-01191-0000	TAG COVER	[EA]	.	.	.	.	.	1
-	016-01008-0004	GLYPTAL 7526 BL	[AR]	.	.	.	.	.	0
-	016-01053-0000	INS GRS MIL G3278	[AR]	.	.	.	.	.	0
-	016-01131-0000	CONTACT CEMENT	[AR]	.	.	.	.	.	0
-	025-00001-0003	WIRE 26 ORN	[IN]	.	.	.	.	.	15
-	025-00001-0004	WIRE 26 YEL	[IN]	.	.	.	.	.	8.5
-	025-00004-0000	WIRE 20 BLK	[IN]	.	.	.	.	.	3
-	025-00004-0005	WIRE 20 GRN	[IN]	.	.	1.2	1.2	1.2	1.7
-	025-00004-0010	WIRE 20 BK/WH	[IN]	.	.	0.8	0.8	0.8	5.6
-	025-00004-0011	WIRE 20 BN/WH	[IN]	.	.	.	.	.	2
-	025-00004-0013	WIRE 20 OR/WH	[IN]	.	.	.	.	.	2.1
-	025-00004-0015	WIRE 20 GN/WH	[IN]	.	.	.	.	.	1.7
-	025-00005-0002	WIRE 18 RED	[IN]	.	.	.	.	.	7
-	025-00005-0008	WIRE 18 GRY	[IN]	.	.	.	.	.	14
-	025-00005-0016	WIRE 18 BU/WH	[IN]	.	.	.	.	.	14
-	025-00024-0004	WIRE 22AWG YEL	[IN]	.	.	.	.	.	2.4
-	025-05012-0000	WIRE 2C SHD WHTBLK	[IN]	.	.	.	.	.	7
-	026-00001-0000	WIRE CU 26AWG TINNE	[AR]	.	.	.	.	.	0
-	026-00013-0000	WIRE COAX RG-178B/U	[IN]	.	.	.	.	.	63.12
-	035-01007-0020	CONN CVR NAS820-8	[EA]	.	.	1	1	.	.
-	035-01361-0016	PROTECTIVE COVER	[EA]	.	.	.	.	.	1
-	047-04874-0001	MTG RACK	[EA]	.	.	.	.	.	1
-	047-04877-0001	CNTR SHLD	[EA]	.	.	.	.	.	1
-	047-04878-0003	BTM CVR W/F&H 28V	[EA]	.	.	.		.	1
-	047-04879-0001	TOP COVER	[EA]	.	.	.	.	.	1
-	047-05189-0001	GUIDE PIN LUG VOR	[EA]	1	.	1	.	1	.
-	047-05817-0000	RADIATION SHIELD	[EA]	.	1	.	1	.	.

057-02203-1006	S/N TAG FLVR BLK	[EA]	1	.	.	.	.	.
057-02203-1007	S/N TAG FLVR BLK	[EA]	.	1	.	.	.	.
057-02203-1020	S/N TAG FLVR BLK	[EA]	.	.	1	.	.	.
057-02203-1021	S/N TAG FLVR BLK	[EA]	.	.	.	1	.	.
057-02203-1022	S/N TAG FLVR BLK	[EA]	.	.	.	.	1	.
057-02305-0000	CNTR SHLD INFO DCL	[EA]	.	.	.	.	.	1
057-02311-0000	VOLTAGE TAG 14V	[EA]	.	.	1	1	1	.
057-02311-0001	VOLTAGE TAG 28V	[EA]	1	1	.	.	.	.
057-02312-0000	DECAL	[EA]	1	1	.	.	1	.
057-02314-0002	S/N TAG	[EA]	.	1	.	.	.	.
057-02314-0003	S/N TAG	[EA]	1	.	.	.	.	.
057-02314-0102	S/N TAG KX165	[EA]	.	.	.	1	.	.
057-02314-0103	S/N TAG KX165	[EA]	.	.	1	.	1	.
057-02337-0000	PRTCTV CVR DECAL	[EA]	.	.	1	1	.	.
057-03187-0000	FCC LABEL	[EA]	.	.	.	.	.	1
057-03511-0001	DECAL CAUTION	[EA]	.	.	1	1	.	.
057-05917-0001	DECAL WARRENTY SEAL	[EA]	.	.	2	2	.	.
069-01025-0099	COMMON BOM	[EA]	1	1	1	1	1	.
073-00404-0003	FRONT PANEL CSTG	[EA]	.	.	.	.	.	1
073-00456-0000	PC BD SPCR	[EA]	.	.	.	.	.	1
076-01055-0001	SPCR	[EA]	1	.	1	.	1	4
076-01146-0000	HEX SPACER .860	[EA]	.	.	.	.	.	1
088-00863-0001	LENS	[EA]	.	.	.	.	.	1
088-00863-0002	LENS	[EA]	.	.	.	.	.	1
089-02009-0037	NUT FLAT 4-40	[EA]	.	.	.	.	.	5
089-02076-0030	NUT FLAT 4-40	[EA]	.	.	.	.	.	5
089-05432-0004	SCR FHP 2-56X1/4	[EA]	.	.	.	.	.	7
089-05436-0004	SCR FHP 4-40X1/4	[EA]	.	.	.	.	.	2
089-05436-0006	SCR FHP 4-40X3/8	[EA]	.	5	.	5	.	6
089-05878-0003	SCR PHP 4-40X3/16	[EA]	.	.	.	.	.	2
089-05878-0004	SCR PHP 4-40X1/4	[EA]	.	.	.	.	.	1
089-05899-0002	SCR PHP 2-56X1/8	[EA]	.	.	.	.	.	6
089-05903-0003	SCR PHP 4-40X3/16	[EA]	.	.	.	.	.	1
089-06123-0003	SCR PHP 4-40X3/16	[EA]	.	.	.	.	.	2
089-06368-0003	SCR FHP 4-40X3/16	[EA]	.	.	.	.	.	4
089-07050-0000	SCR FHP 4-40X7/16	[EA]	1	.	1	.	1	.
089-08109-0034	WSHR SPLT LK #4	[EA]	.	.	.	.	.	7
090-00991-0001	PROTECTIVE CLOSURE	[EA]	.	.	1	2	.	.
091-00109-0000	CABLE TIE .234	[EA]	.	.	.	.	.	12
150-00003-0010	TUBING TFLN 24AWG	[AR]	.	.	.	.	.	0
150-00049-0010	TUBING SHRINK WHT	[IN]	.	.	.	.	.	1
150-00103-0000	SLDR SLEEVE	[EA]	.	.	.	.	.	12
187-01018-0000	CUSHION RELAY	[EA]	.	.	.	.	.	2

-	195-00119-0001	S/N TAG OPTION	[EA]	1	1	.	.	.	.
-	195-00180-0000	S/N TAG OPTION	[EA]	.	.	1	1	1	.
-	200-02612-0003	MN CHAS KX 165 28V	[EA]	1	1	.	.	.	.
-	200-02612-0007	MAIN CHASSIS 14V	[EA]	.	.	1	1	1	.
-	200-02613-0000	GLIDESLOPE	[EA]	.	1	.	1	.	.
-	200-02641-0000	R/T ASSY 14V	[EA]	.	.	1	1	.	.
-	200-02641-0001	R/T ASSY 14V 50KHZ	[EA]	.	.	.	.	1	.
-	200-02641-0003	R-T ASSY 28V 50KHZ	[EA]	1	1	.	.	.	.
-	200-06071-0010	VOR/LOC CONV	[EA]	.	.	.	.	.	1
DS 101	037-00073-0000	DISPLAY KX 165	[EA]	.	.	.	.	.	1
L 817	013-00006-0001	FERR BEAD	[EA]	.	.	.	.	.	1
L 818	013-00006-0001	FERR BEAD	[EA]	.	.	.	.	.	1

069-01025-0023	KX165 NAV/COM	Rev 2	KX 165
069-01025-0024	KX165 NAV/COM	Rev AA	KX 165
069-01025-0025	KX165 NAV/COM	Rev AA	KX 165
069-01025-0026	KX165 NAV/COM	Rev 2	KX 165
069-01025-0027	KX165 NAV/COM	Rev 2	KX 165
069-01025-0099	COMMON BOM	Rev 14	KX 165

SYMBOL	CAS PART NBR	DESCRIPTION	[UOM]	-0023	-0024	-0025	-0026	-0027	-0099
-	008-00005-0004	TND COP LUG	[EA]	.	.	1	.	.	.
-	012-01002-0000	TAPE .250W	[IN]	.	.	.	.	.	2
-	012-01005-0003	TAPE MYLAR .250 W	[IN]	.	.	.	.	.	0.394
-	012-01021-0006	TAPE ELEC 3/8 WD	[IN]	.	.	.	.	.	1
-	012-01038-0000	ADHESIVE DISC	[EA]	.	.	.	.	.	1
-	012-01127-0000	TAG COVER	[EA]	.	4	.	4	.	16
-	012-01154-0000	INSUL CNT SHLD	[EA]	.	.	.	.	.	1
-	012-01181-0000	TOP COVER INSUL	[EA]	.	.	.	.	.	1
-	012-01191-0000	TAG COVER	[EA]	.	.	.	.	.	1
-	016-01008-0004	GLYPTAL 7526 BL	[AR]	.	.	.	.	.	0
-	016-01053-0000	INS GRS MIL G3278	[AR]	.	.	.	.	.	0
-	016-01131-0000	CONTACT CEMENT	[AR]	.	.	.	.	.	0
-	025-00001-0003	WIRE 26 ORN	[IN]	.	.	.	.	.	15
-	025-00001-0004	WIRE 26 YEL	[IN]	.	.	.	.	.	8.5
-	025-00004-0000	WIRE 20 BLK	[IN]	.	.	.	.	.	3
-	025-00004-0005	WIRE 20 GRN	[IN]	1.2	.	.	.	.	1.7
-	025-00004-0010	WIRE 20 BK/WH	[IN]	0.8	.	.	.	.	5.6
-	025-00004-0011	WIRE 20 BN/WH	[IN]	.	.	.	.	.	2
-	025-00004-0013	WIRE 20 OR/WH	[IN]	.	.	.	.	.	2.1
-	025-00004-0015	WIRE 20 GN/WH	[IN]	.	.	.	.	.	1.7
-	025-00005-0002	WIRE 18 RED	[IN]	.	.	.	.	.	7
-	025-00005-0008	WIRE 18 GRY	[IN]	.	.	.	.	.	14
-	025-00005-0016	WIRE 18 BU/WH	[IN]	.	.	.	.	.	14
-	025-00024-0004	WIRE 22AWG YEL	[IN]	.	.	.	.	.	2.4
-	025-05012-0000	WIRE 2C SHD WHTBLK	[IN]	.	.	.	.	.	7
-	026-00001-0000	WIRE CU 26AWG TINNE	[AR]	.	.	.	.	.	0
-	026-00013-0000	WIRE COAX RG-178B/U	[IN]	.	.	.	.	.	63.12
-	035-01007-0020	CONN CVR NAS820-8	[EA]	.	1	1	.	.	.
-	035-01361-0016	PROTECTIVE COVER	[EA]	.	.	.	.	.	1
-	047-04874-0001	MTG RACK	[EA]	.	.	.	.	.	1
-	047-04877-0001	CNTR SHLD	[EA]	.	.	.	.	.	1
-	047-04878-0003	BTM CVR W/F&H 28V	[EA]	.	.	.	.	.	1
-	047-04879-0001	TOP COVER	[EA]	.	.	.	.	.	1
-	047-05189-0001	GUIDE PIN LUG VOR	[EA]	.	1	.	1	.	.
-	047-05817-0000	RADIATION SHIELD	[EA]	1	.	1	.	1	.

057-02203-1023	S/N TAG FLVR BLK	[EA]	1	.	.	.	.	.
057-02203-1024	S/N TAG FLVR BLK	[EA]	.	1	.	.	.	.
057-02203-1025	S/N TAG FLVR BLK	[EA]	.	.	1	.	.	.
057-02203-1026	S/N TAG FLVR BLK	[EA]	.	.	.	1	.	.
057-02203-1027	S/N TAG FLVR BLK	[EA]	.	.	.	.	1	.
057-02305-0000	CNTR SHLD INFO DCL	[EA]	.	.	.	.	.	1
057-02311-0000	VOLTAGE TAG 14V	[EA]	1	.	.	.	.	.
057-02311-0001	VOLTAGE TAG 28V	[EA]	.	1	1	1	1	.
057-02312-0000	DECAL	[EA]	1	.	.	1	1	.
057-02314-0102	S/N TAG KX165	[EA]	1	.	1	.	1	.
057-02314-0103	S/N TAG KX165	[EA]	.	1	.	1	.	.
057-02337-0000	PRTCTV CVR DECAL	[EA]	.	1	1	.	.	.
057-03187-0000	FCC LABEL	[EA]	.	.	.	.	.	1
057-03511-0001	DECAL CAUTION	[EA]	.	1	1	.	.	.
057-05917-0001	DECAL WARRENTY SEAL	[EA]	.	2	2	.	.	.
069-01025-0099	COMMON BOM	[EA]	1	1	1	1	1	.
073-00404-0003	FRONT PANEL CSTG	[EA]	.	.	.	.	.	1
073-00456-0000	PC BD SPCR	[EA]	.	.	.	.	.	1
076-01055-0001	SPCR	[EA]	.	1	.	1	.	4
076-01146-0000	HEX SPACER .860	[EA]	.	.	.	.	.	1
088-00863-0001	LENS	[EA]	.	.	.	.	.	1
088-00863-0002	LENS	[EA]	.	.	.	.	.	1
089-02009-0037	NUT FLAT 4-40	[EA]	.	.	.	.	.	5
089-02076-0030	NUT FLAT 4-40	[EA]	.	.	.	.	.	5
089-05432-0004	SCR FHP 2-56X1/4	[EA]	.	.	.	.	.	7
089-05436-0004	SCR FHP 4-40X1/4	[EA]	.	.	.	.	.	2
089-05436-0006	SCR FHP 4-40X3/8	[EA]	5	.	5	.	5	6
089-05878-0003	SCR PHP 4-40X3/16	[EA]	.	.	.	.	.	2
089-05878-0004	SCR PHP 4-40X1/4	[EA]	.	.	.	.	.	1
089-05899-0002	SCR PHP 2-56X1/8	[EA]	.	.	.	.	.	6
089-05903-0003	SCR PHP 4-40X3/16	[EA]	.	.	.	.	.	1
089-06123-0003	SCR PHP 4-40X3/16	[EA]	.	.	.	.	.	2
089-06368-0003	SCR FHP 4-40X3/16	[EA]	.	.	.	.	.	4
089-07050-0000	SCR FHP 4-40X7/16	[EA]	.	1	.	1	.	.
089-08109-0034	WSHR SPLT LK #4	[EA]	.	.	.	.	.	7
090-00991-0001	PROTECTIVE CLOSURE	[EA]	.	1	2	.	.	.
091-00109-0000	CABLE TIE .234	[EA]	.	.	.	.	.	12
150-00003-0010	TUBING TFLN 24AWG	[AR]	.	.	.	.	.	0
150-00049-0010	TUBING SHRINK WHT	[IN]	.	.	.	.	.	1
150-00103-0000	SLDR SLEEVE	[EA]	.	.	.	.	.	12
187-01018-0000	CUSHION RELAY	[EA]	.	.	.	.	.	2
195-00180-0000	S/N TAG OPTION	[EA]	1	.	.	.	.	.
195-00180-0001	S/N TAG OPTION	[EA]	.	1	1	1	1	.

-	200-02612-0007	MAIN CHASSIS 14V	[EA]	1	.	.	.	.	.
-	200-02612-0008	MAIN CHASSIS 28V	[EA]	.	1	1	1	1	.
-	200-02613-0000	GLIDESLOPE	[EA]	1	.	1	.	1	.
-	200-02641-0001	R/T ASSY 14V 50KHZ	[EA]	1	.	.	.	.	.
-	200-02641-0002	R-T ASSY 28V	[EA]	.	1	1	.	.	.
-	200-02641-0003	R-T ASSY 28V 50KHZ	[EA]	.	.	.	1	1	.
-	200-06071-0010	VOR/LOC CONV	[EA]	.	.	.	.	.	1
DS 101	037-00073-0000	DISPLAY KX 165	[EA]	.	.	.	.	.	1
L 817	013-00006-0001	FERR BEAD	[EA]	.	.	.	.	.	1
L 818	013-00006-0001	FERR BEAD	[EA]	.	.	.	.	.	1

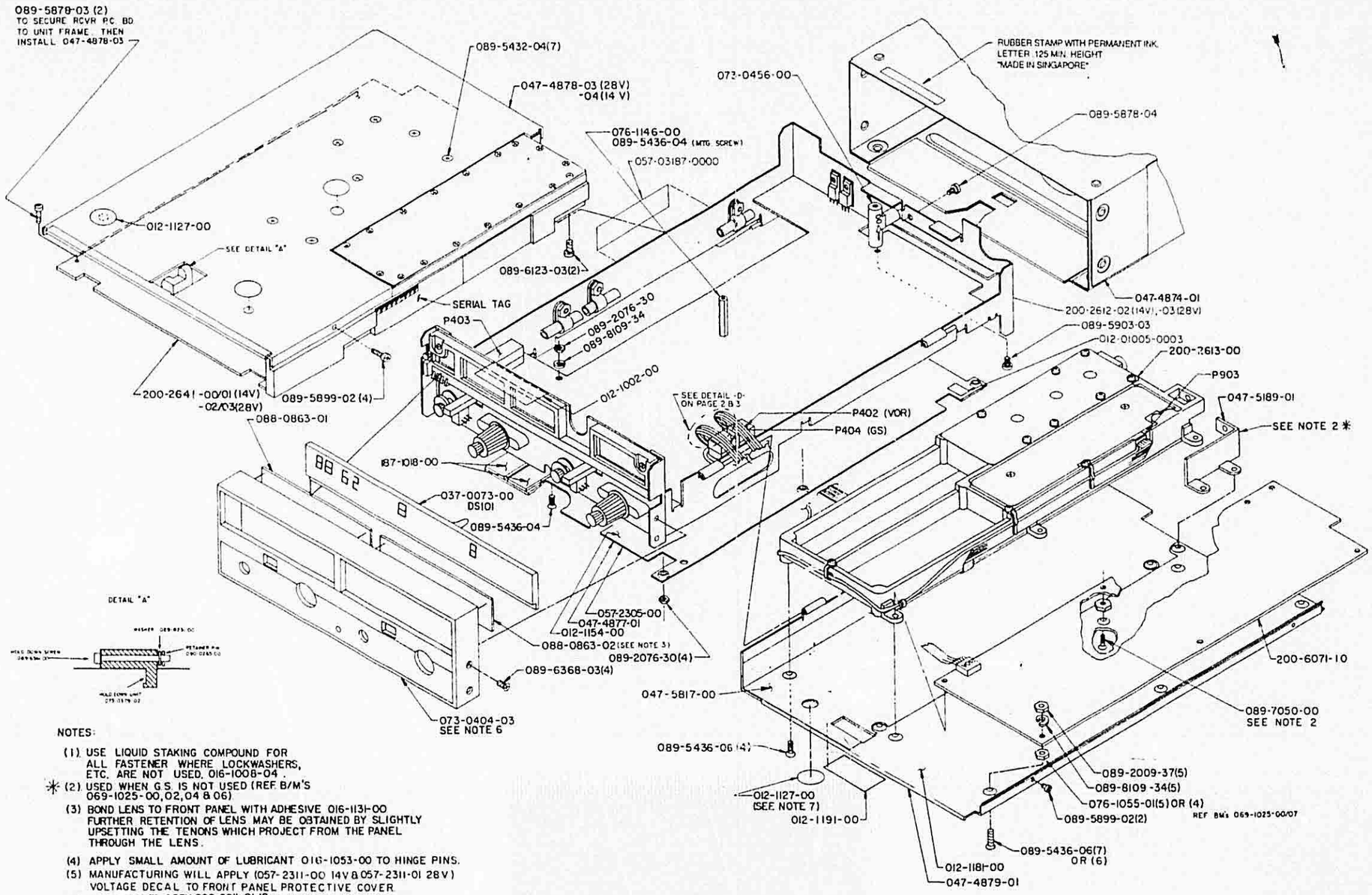

NOTES:

(1) USE LIQUID STAKING COMPOUND FOR ALL FASTENER WHERE LOCKWASHERS, ETC. ARE NOT USED. 016-1008-04.

✳ (2) USED WHEN G.S. IS NOT USED (REF. B/M'S 069-1025-00, 02, 04 & 06)

(3) BOND LENS TO FRONT PANEL WITH ADHESIVE 016-1131-00 FURTHER RETENTION OF LENS MAY BE OBTAINED BY SLIGHTLY UPSETTING THE TENONS WHICH PROJECT FROM THE PANEL THROUGH THE LENS.

(4) APPLY SMALL AMOUNT OF LUBRICANT 016-1053-00 TO HINGE PINS.

(5) MANUFACTURING WILL APPLY (057-2311-00 14V & 057-2311-01 28V) VOLTAGE DECAL TO FRONT PANEL PROTECTIVE COVER.

(6) FRONT PANEL ASSY 200-2911-01 IS AVAILABLE WITH LENS SECURED IN PANEL.

(7) APPLY 012-1127-00 TAG CVR TO ALL UNUSED SCREW HOLES AND ALL ALIGNMENT HOLES.

FIGURE 6-3E KX 165 Final Assembly
(Dwg. No. 300-02486-0001, Rev. 43, sheet 1 of 3)

NOTES

1. WIRE TIE DOWN IS 026-0001-00 26 GA. BUSS WIRE WITH 130-0003-10, INSULATIVE SLEEVING.
2. WATCH FOR PINCHING OF WIRES BETWEEN CAP & UNIT FRAME.
3. FOLD FLEX CABLE PROPERLY TO AVOID PINCHING (ALL FLEX CABLES)
4. JUMPER WIRE (026-00003-0000) IS USED TO HOLD DOWN THE COAX CABLE, AT THE GROUND, TO THE SOLDER PAD.
5. STRIP OUTER INSULATION AND SOLDER BRAID TO FENCE OR BIFURCATED TERM. (E360) WHERE SHOWN.
6. SECURE WITH CABLE TIE (008-00005-0004).
7. SOLDER THIS LEAD OF CAPACITOR C1106 TO E201 IN 28 V RADIOS ONLY IN 14 V RADIOS, SOLDER LEAD TO E215.
8. STRIP OUTER INSULATION OF COAX AND SOLDER BRAID OF NAV AND COMM COAX'S (WHICH TERMINATES AT E350, E347, E348, & E349) TOGETHER WITH SOLDER SLEEVE 150-00072-0000

WIRING DIAGRAM (14 & 28V)					
FROM	TO	DESCRIPTION	KPN	FEET	VOLTS
E136	E436	26 ORN	025-0001-03	1.25	14,28
E137	E437	18 BLU/WHT	025-0005-16	1.16	14, 28
E138	E438	18 GRY	025-0005-08	1.16	14, 28
E139/E140	E439/E440	COAX RG178	026-0013-00	.63	14, 28
E141/E142	E441/E442	COAX RG178	026-0013-00	.70	14, 28
E215/GND		CABLE(PAIR)BRAID	025-5012-00	.70	14, 28 *
E204	E244	CABLE (PAIR) WHT	025-5012-00	.70	28 *
E201	E445	CABLE (PAIR) BLK	025-5012-00	.70	14,28 *
E202	E443	18 RED	025-0005-02	.58	14,28
E203	E446	26 YEL	025-0001-04	.71	14,28
E207	E444	CABLE (PAIR) WHT	025-5012-00	.70	14 *
E347/E350	E447/GND.	COAX RG 178	026-0013-00	1.58	14,28
E348/E349	E448/GND	COAX RG 178	026-0013-00	1.46	14,28
E449/GND	E902/E903	COAX RG 178	026-0013-00	1.50	14,28
E206	E301	20 GRN	025-0004-05	.24	14
E206	E205	20 GRN	025-0004-05	.14	28
E209	E309	20 GRN/WHT	025-0004-15	.14	14, 28
E213	E310	26 WHT/YEL	025-0018-94	.20	14,28
E300	E800	20 BLK/WHT	025-0004-10	.46	28
E301	E801	20 BRN/WHT	025-0004-11	.16	28
E302/E303 GND	E802/E803 GND	COAX RG178	026-0013-00	.39	14,28
E304	E804	20 ORN/WHT	025-0004-13	.17	14,28
E305/E306 GND	E805/E806 GND	COAX RG178	026-0013-00	.50	14,28
E308	E808	20 BLK	025-0004-00	.11	14,28
E316	E801	20 BRN/WHT	025-0004-11	.16	14
E300	E800	20 BLK/WHT	025-0004-10	.52	14

* SEE DETAIL "C"

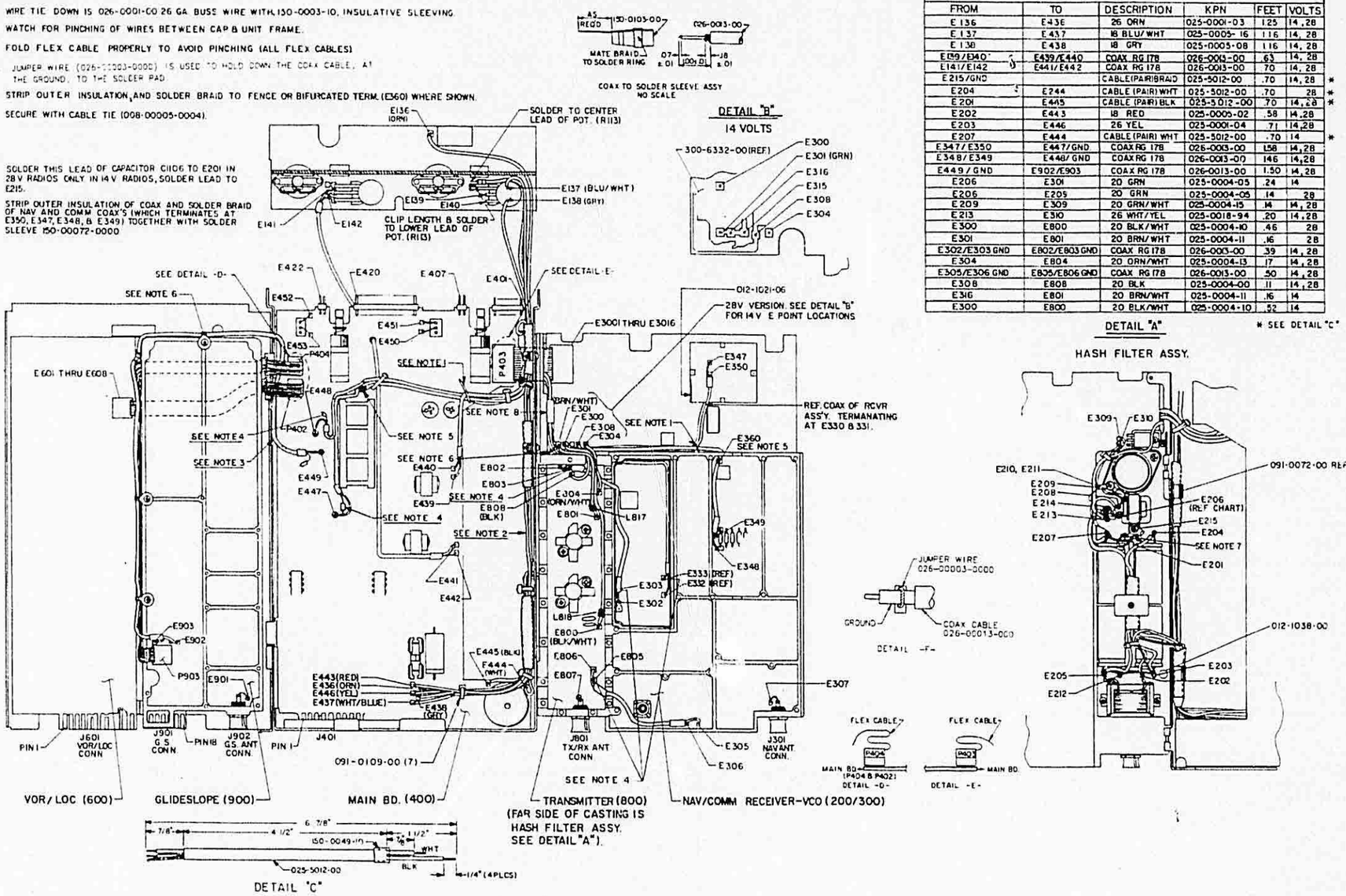

FIGURE 6-3E KX 165 Final Assembly
(Dwg. No. 300-02486-0001, Rev. 43, sheet 2 of 3)

NOTES:

1. WIRE TIE DOWN IS 026-0001-00 26 GA BUSS WIRE WITH 150-0003-10, INSULATIVE SLEEVING.
2. WATCH FOR PINCHING OF WIRES BETWEEN CAP & UNIT FRAME.
3. FOLD FLEX CABLE PROPERLY TO AVOID PINCHING (ALL FLEX CABLES)
4. JUMPER WIRE (026-00003-0000) IS USED TO HOLD DOWN THE COAX CABLE, AT THE GROUND, TO THE SOLDER PAD.
5. 14V KX 165; STRIP OUTER INSULATION OF NAV COAX (GOING TO E348/E349) AND SOLDER BRAID TO BIFURCATED TERM (E355) WHERE SHOWN. 28V KX 165; STRIP OUTER INSULATION OF NAV COAX (GOING TO E348/E349) AND COMM COAX (GOING TO E347/E350). SOLDER BRAIDS OF COMM AND NAV COAXS TO BIFURCATED TERM (E355) WHERE SHOWN.
6. SECURE WITH CABLE TIE (008-00005-0004).
7. SOLDER THIS LEAD OF CAPACITOR C106 TO E201 IN 28 V RADIOS ONLY. IN 14 V RADIOS, SOLDER LEAD TO E215.
8. STRIP OUTER INSULATION OF COAX AND SOLDER BRAID OF NAV AND COMM COAX'S (WHICH TERMINATES AT E350, E347, E348, & E349) THEN SECURE AND SOLDER BRAID TO (008-00005-0004) CABLE TIE.
9. BENT LUG TO HOLD COAXIAL CABLE.

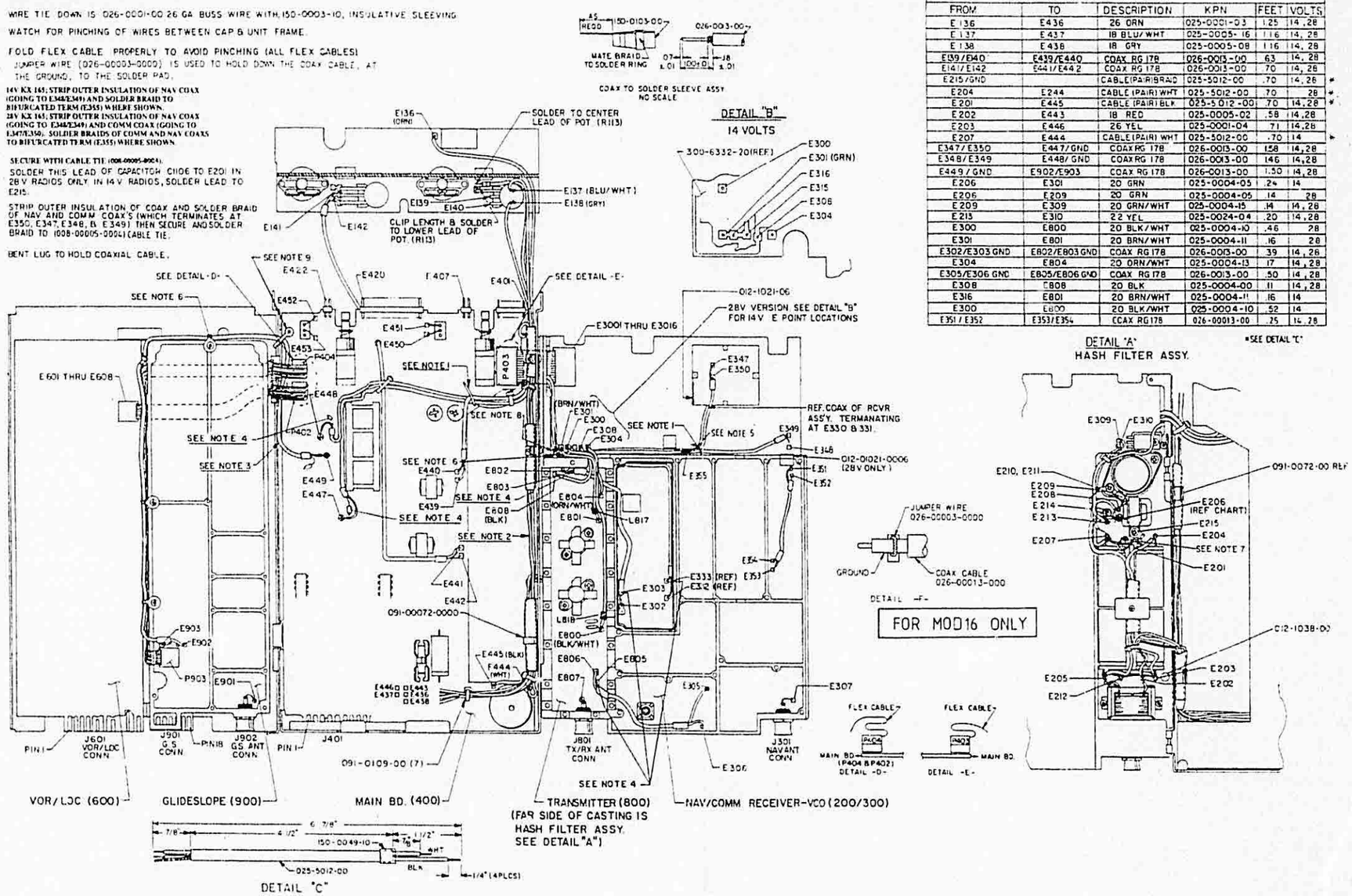

WIRING DIAGRAM (14 & 28V)					
FROM	TO	DESCRIPTION	KPN	FEET	VOLTS
E136	E436	26 ORN	025-0001-03	1.25	14, 28
E137	E437	18 BLU/WHT	025-0005-16	1.16	14, 28
E138	E438	18 GRY	025-0005-08	1.16	14, 28
E139/E140	E439/E440	COAX RG178	026-0013-00	.63	14, 28
E141/E142	E441/E442	COAX RG178	026-0013-00	.70	14, 28
E215/GND		CABLE(PAIR)BRAID	025-5012-00	.70	14, 28 *
E204	E244	CABLE (PAIR) WHT	025-5012-00	.70	28 *
E201	E445	CABLE (PAIR) BLK	025-5012-00	.70	14, 28 *
E202	E443	18 RED	025-0005-02	.58	14, 28
E203	E446	26 YEL	025-0001-04	.71	14, 28
E207	E444	CABLE(PAIR) WHT	025-5012-00	.70	14 *
E347/E350	E447/GND	COAX RG 178	026-0013-00	.158	14, 28
E348/E349	E448/GND	COAX RG 178	026-0013-00	.146	14, 28
E449/GND	E902/E903	COAX RG 178	026-0013-00	1.50	14, 28
E206	E301	20 GRN	025-0004-05	.24	14
E208	E209	20 GRN	025-0004-05	.14	28
E209	E309	20 GRN/WHT	025-0004-15	.14	14, 28
E213	E310	22 YEL	025-0024-04	.20	14, 28
E300	E800	20 BLK/WHT	025-0004-10	.46	28
E301	E801	20 BRN/WHT	025-0004-11	.16	28
E302/E303 GND	E802/E803 GND	COAX RG 178	026-0013-00	.39	14, 28
E304	E804	20 ORN/WHT	025-0004-13	.17	14, 28
E305/E306 GND	E805/E806 GND	COAX RG 178	026-0013-00	.50	14, 28
E308	E808	20 BLK	025-0004-00	.11	14, 28
E316	E801	20 BRN/WHT	025-0004-11	.16	14
E300	E800	20 BLK/WHT	025-0004-10	.52	14
E351/E352	E353/E354	COAX RG178	026-0013-00	.25	14, 28

FIGURE 6-3E KX 165 Final Assembly
(Dwg. No. 300-02486-0001, Rev. 43, sheet 3 of 3)

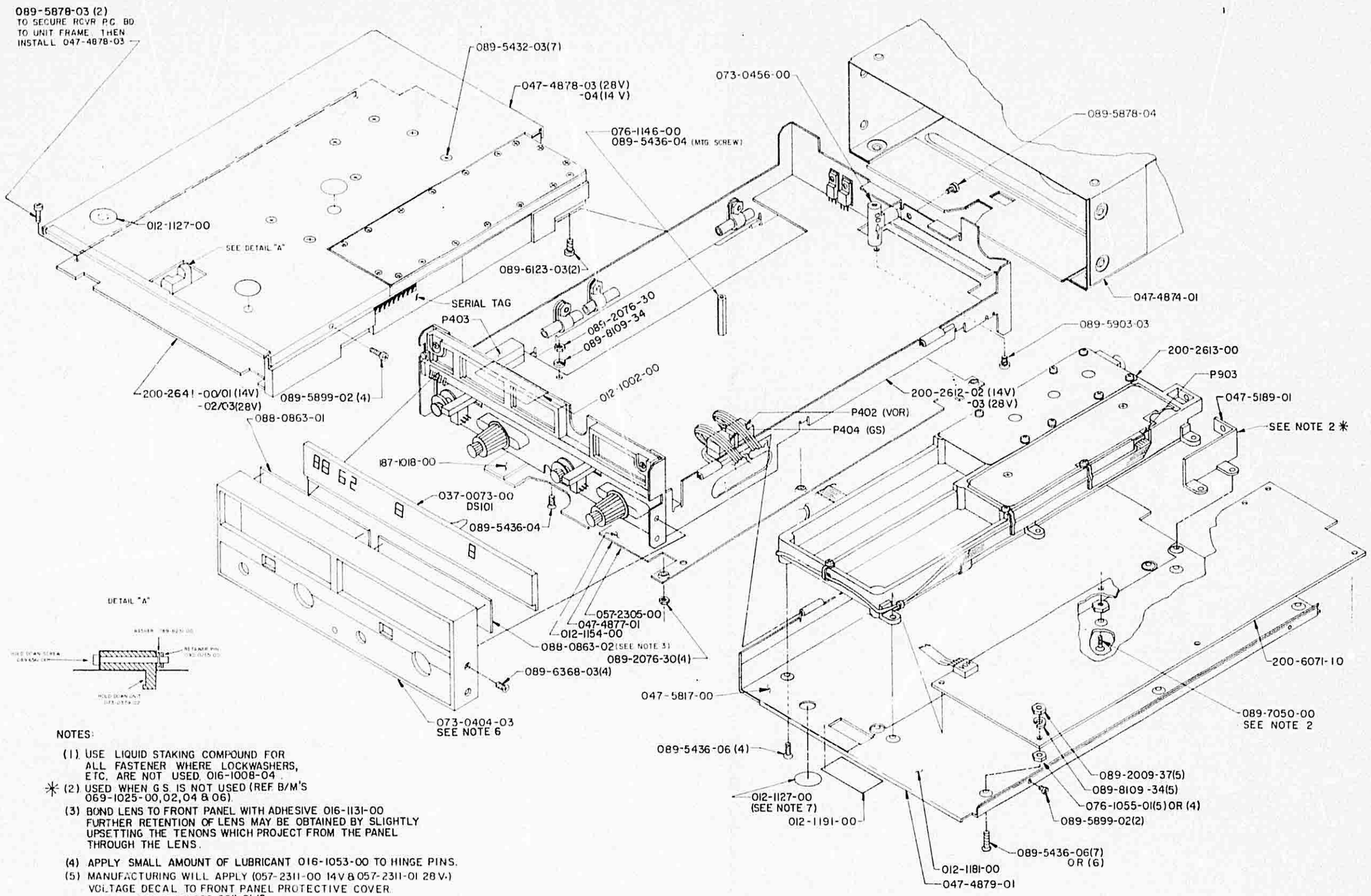

NOTES:

(1) USE LIQUID STAKING COMPOUND FOR ALL FASTENER WHERE LOCKWASHERS, ETC. ARE NOT USED. 016-1008-04.

✳ (2) USED WHEN G.S. IS NOT USED (REF B/M'S 069-1025-00,02,04 & 06).

(3) BOND LENS TO FRONT PANEL WITH ADHESIVE 016-1131-00. FURTHER RETENTION OF LENS MAY BE OBTAINED BY SLIGHTLY UPSETTING THE TENONS WHICH PROJECT FROM THE PANEL THROUGH THE LENS.

(4) APPLY SMALL AMOUNT OF LUBRICANT 016-1053-00 TO HINGE PINS.

(5) MANUFACTURING WILL APPLY (057-2311-00 14V & 057-2311-01 28V.) VOLTAGE DECAL TO FRONT PANEL PROTECTIVE COVER.

(6) FRONT PANEL ASSY 200-2911-01 IS AVAILABLE WITH LENS SECURED IN PANEL.

(7) APPLY 012-1127-00 TAG CVR TO ALL UNUSED SCREW HOLES AND ALL ALIGNMENT HOLES.

FIGURE 6-3D KX 165 FINAL ASSEMBLY
(Dwg. No. 300-02486-0001, R-29)
(Sheet 1 of 2)

NOTES:

1. WIRE TIE DOWN IS 026-0001-00 26 GA BUSS WIRE WITH 150-0003-10, INSULATIVE SLEEVING
2. WATCH FOR PINCHING OF WIRES BETWEEN CAP & UNIT FRAME.
3. FOLD FLEX CABLE PROPERLY TO AVOID PINCHING (ALL FLEX CABLES)
4. SOLDER GROUND WIRE OF 150-0103-00, COAX TERMINATION, TO 008-0104-00, PC BD. TERMINATION CLIP, FOR GOOD GROUNDING, TYPICAL.
5. STRIP OUTER INSULATION, AND SOLDER BRAID TO FENCE OR BIFURCATED TERM (E360) WHERE SHOWN.
6. STRIP OUTER INSULATION, AND SOLDER BRAID OF COAX TO CABLE TIE (008-0005-04) ON COMM. AND NAV COAX WHICH TERMINATES AT E350, E347, E348, E349.
7. SOLDER THIS LEAD OF CAPACITOR C1106 TO E201 IN 28V RADIOS ONLY. IN 14V RADIOS, SOLDER LEAD TO E215.

WIRING DIAGRAM (14 & 28V)					
FROM	TO	DESCRIPTION	KPN	FEET	VOLTS
E136	E436	26 ORN	025-0001-03	1.25	14,28
E137	E437	18 BLU/WHT	025-0005-16	1.16	14,28
E138	E438	18 GRY	025-0005-08	1.16	14,28
E139/E140	E439/E440	COAX RG178	026-0013-00	.63	14,28
E141/E142	E441/E442	COAX RG178	026-0013-00	.70	14,28
E215/GND		CABLE(PAIR)BRAID	025-5012-00	.70	14,28 *
E204	E244	CABLE (PAIR) WHT	025-5012-00	.70	28 *
E201	E445	CABLE (PAIR) BLK	025-5012-00	.70	14,28 *
E202	E443	18 RED	025-0005-02	.58	14,28
E203	E446	26 YEL	025-0001-04	.71	14,28
E207	E444	CABLE (PAIR) WHT	025-5012-00	.70	14 *
E347/E350	E447/GND	COAX RG 178	026-0013-00	.158	14,28
E348/E349	E448/GND	COAX RG 178	026-0013-00	.146	14,28
E449/GND	E902/E903	COAX RG 178	026-0013-00	1.50	14,28
E206	E301	20 GRN	025-0004-05	.24	14
E206	E209	20 GRN	025-0004-05	.14	28
E209	E309	20 GRN/WHT	025-0004-15	.14	14,28
E213	E310	26 WHT/YEL	025-0018-94	.20	14,28
E300	E800	20 BLK/WHT	025-0004-10	.46	28
E301	E801	20 BRN/WHT	025-0004-11	.16	28
E302/E303 GND	E802/E803 GND	COAX RG 178	026-0013-00	.39	14,28
E304	E804	20 ORN/WHT	025-0004-13	.17	14,28
E305/E306 GND	E805/E806 GND	COAX RG 178	026-0013-00	.50	14,28
E308	E808	20 BLK	025-0004-00	.11	14,28
E316	E801	20 BRN/WHT	025-0004-11	.16	14
E300	E800	20 BLK/WHT	025-0004-10	.52	14

* SEE DETAIL "C"

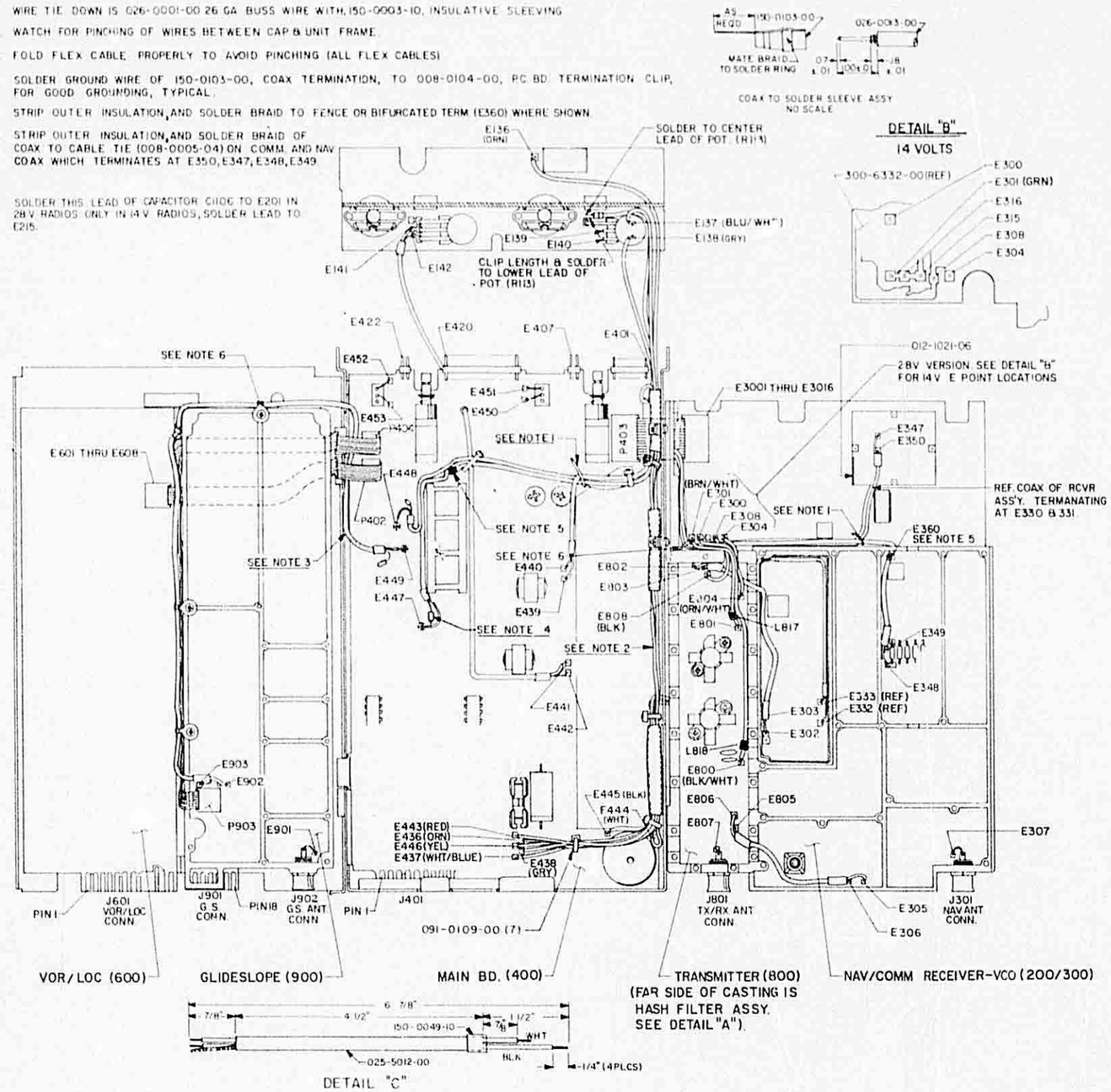

DETAIL "A"

HASH FILTER ASSY.

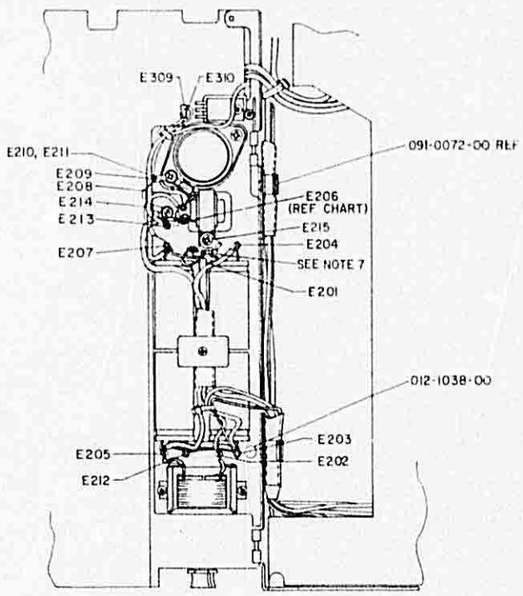

FIGURE 6-3D KX 165 FINAL ASSEMBLY
(Dwg. No. 300-02486-0001, R-29)
(Sheet 2 of 2)

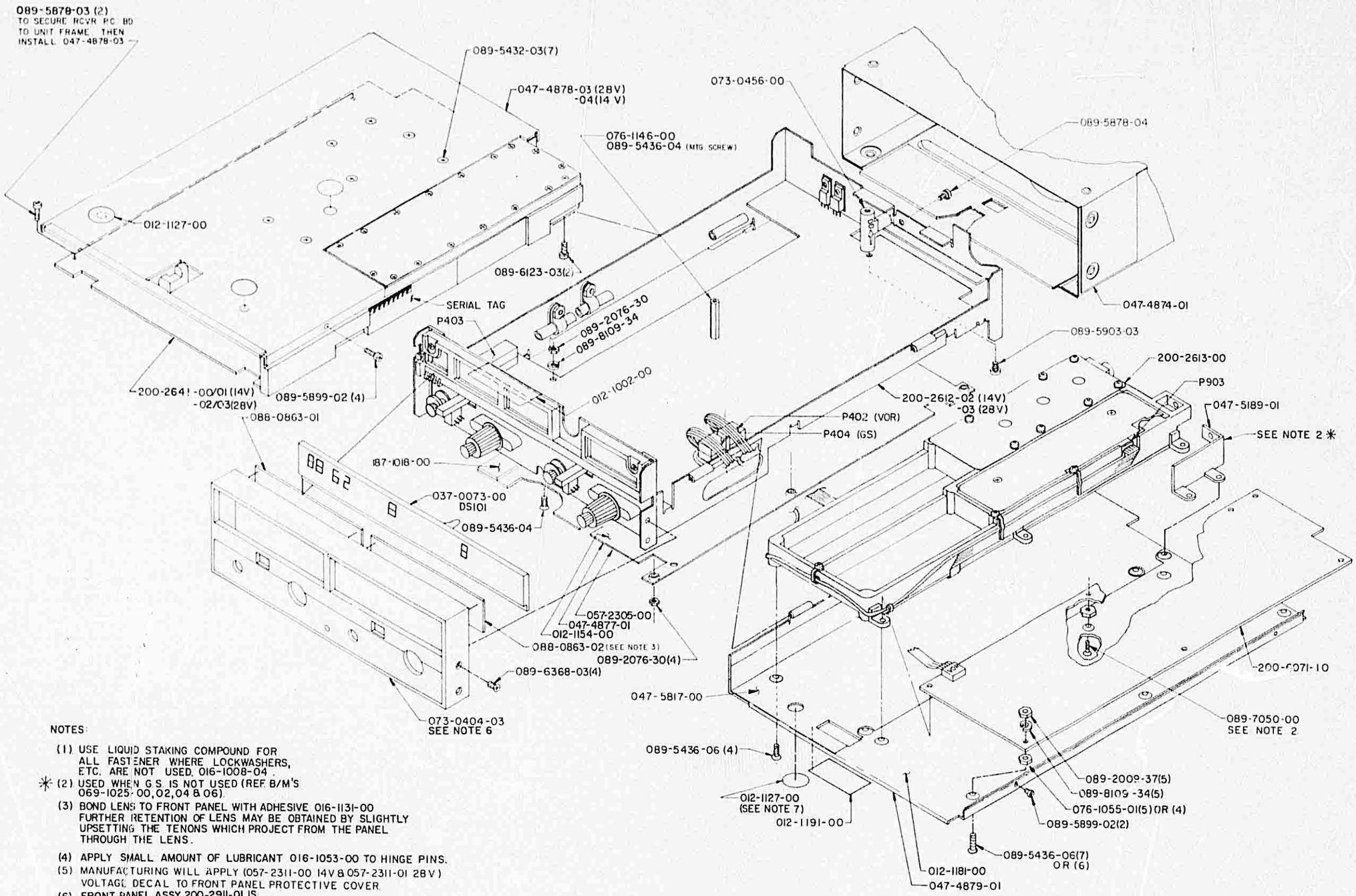

NOTES:

(1) USE LIQUID STAKING COMPOUND FOR ALL FASTENER WHERE LOCKWASHERS, ETC. ARE NOT USED. 016-1008-04 .

✳ (2) USED WHEN G S IS NOT USED (REF B/M'S 069-1025-00,02,04 & 06).

(3) BOND LENS TO FRONT PANEL WITH ADHESIVE 016-1131-00 FURTHER RETENTION OF LENS MAY BE OBTAINED BY SLIGHTLY UPSETTING THE TENONS WHICH PROJECT FROM THE PANEL THROUGH THE LENS.

(4) APPLY SMALL AMOUNT OF LUBRICANT 016-1053-00 TO HINGE PINS.

(5) MANUFACTURING WILL APPLY (057-2311-00 14V & 057-2311-01 28V) VOLTAGE DECAL TO FRONT PANEL PROTECTIVE COVER.

(6) FRONT PANEL ASSY 200-2911-01 IS AVAILABLE WITH LENS SECURED IN PANEL.

(7) APPLY 012-1127-00 TAG CVR TO ALL UNUSED SCREW HOLES AND ALL ALIGNMENT HOLES.

FIGURE 6-3C KX 165 FINAL ASSEMBLY
(Dwg. No. 300-02486-0001, R-25)
(Sheet 1 of 2)

NOTES

1. WIRE TIE DOWN IS 026-0001-00 26 GA. BUSS WIRE WITH, 150-0003-10, INSULATIVE SLEEVING
2. WATCH FOR PINCHING OF WIRES BETWEEN CAP & UNIT FRAME.
3. FOLD FLEX CABLE PROPERLY TO AVOID PINCHING (ALL FLEX CABLES)
4. SOLDER GROUND WIRE OF 150-0103-00, COAX TERMINATION, TO 008-0104-00, P.C. BD. TERMINATION CLIP, FOR GOOD GROUNDING, TYPICAL.
5. STRIP OUTER INSULATION, AND SOLDER BRAID TO FENCE OR BIFURCATED TERM. (E360) WHERE SHOWN.
6. STRIP OUTER INSULATION, AND SOLDER BRAID OF COAX TO CABLE TIE (008-0005-04) ON COMM. AND NAV COAX WHICH TERMINATES AT E350, E347, E348, E349.
7. SOLDER THIS LEAD OF CAPACITOR C1106 TO E201 IN 28V RADIOS ONLY. IN 14V RADIOS, SOLDER LEAD TO E215.

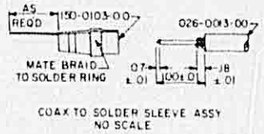

COAX TO SOLDER SLEEVE ASSY
NO SCALE

DET/IL "B"
14 VOLTS

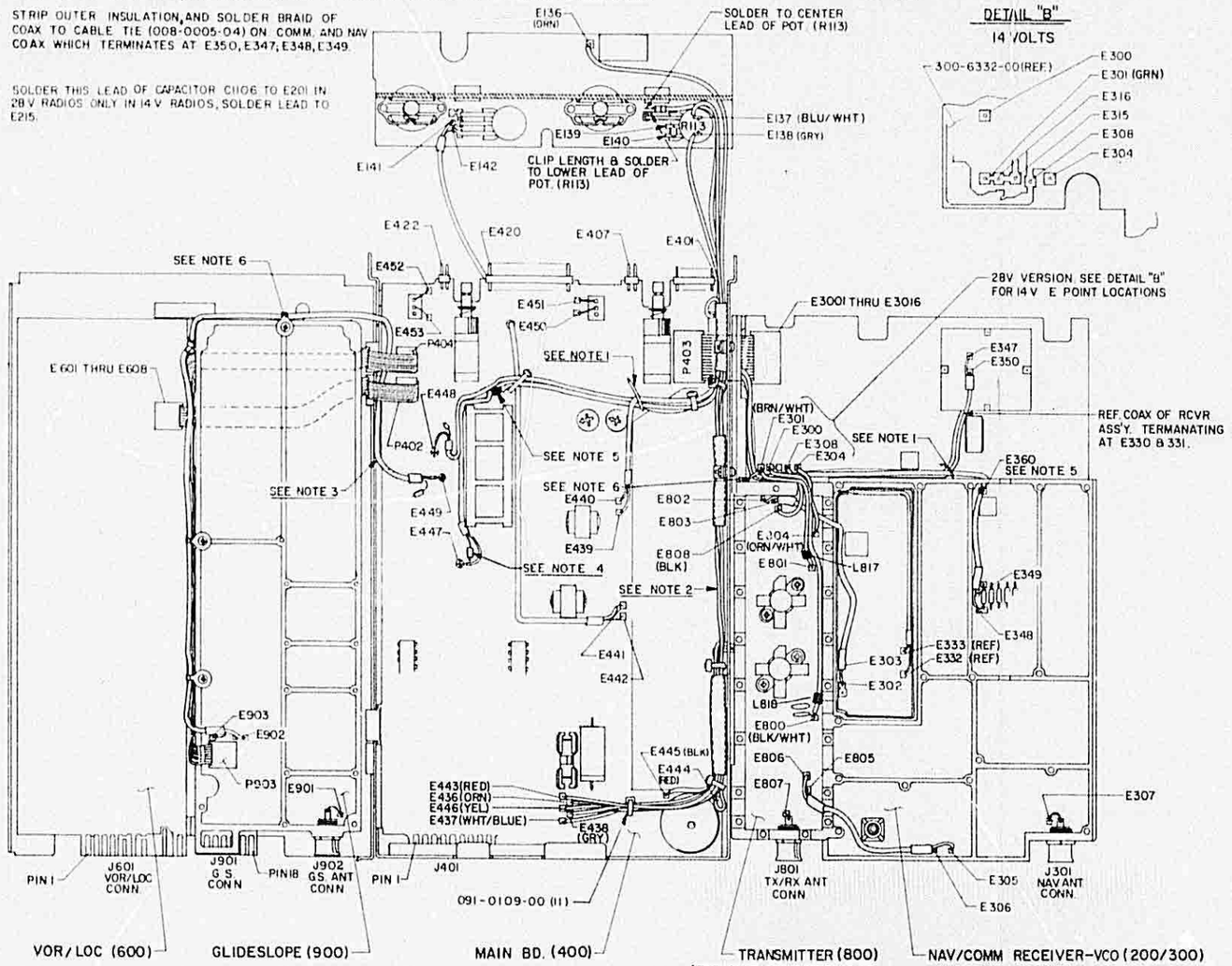

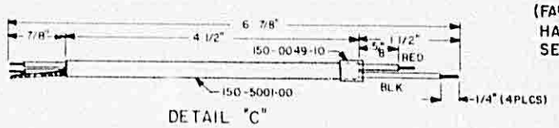

DETAIL "C"

WIRING DIAGRAM (14 & 28V)					
FROM	TO	DESCRIPTION	KPN	FEET	VOLTS
E136	E436	26 ORN	025-0001-03	1.25	14, 28
E137	E437	18 BLU/WHT	025-0005-16	1.16	14, 28
E138	E438	18 GRY	025-0005-08	1.16	14, 28
E139/E140	E439/E440	COAX RG 178	026-0013-00	.63	14, 28
E141/E142	E441/E442	COAX RG 178	026-0013-00	.70	14, 28
E215/GND		CABLE (PAIR) BRAID	025-5001-00	.70	14, 28 *
E204	E244	CABLE (PAIR) RED	025-5001-00	.70	28 *
E201	E445	CABLE (PAIR) BLK	025-5001-00	.70	14, 28 *
E202	E443	18 RED	025-0005-02	.95	14, 28
E203	E446	26 YEL	025-0001-04	1.00	14, 28
E207	E444	CABLE (PAIR) RED	025-5001-00	.70	14 *
E347/E350	E447/GND	COAX RG 178	026-0013-00	.158	14, 28
E348/E349	E448/GND	COAX RG 178	026-0013-00	.146	14, 28
E449/GND	E902/E903	COAX RG 178	026-0013-00	1.50	14, 28
E206	E301	20 GRN	025-0004-05	.24	14
E206	E209	20 GRN	025-0004-05	.14	28
E209	E309	20 GRN/WHT	025-0004-15	.14	14, 28
E213	E310	26 WHT/YEL	025-0018-94	.20	14, 28
E300	E800	20 BLK/WHT	025-0004-10	.46	28
E301	E801	20 BRN/WHT	025-0004-11	.16	28
E302/E303 GND	E802/E803 GND	COAX RG 178	026-0013-00	.39	14, 28
E304	E804	20 ORN/WHT	025-0004-13	.17	14, 28
E305/E306 GND	E805/E806 GND	COAX RG 178	026-0013-00	.50	14, 28
E308	E808	20 BLK	025-0004-00	.11	14, 28
E316	E801	20 BRN/WHT	025-0004-11	.16	14
E300	E800	20 BLK/WHT	025-0004-10	.52	14

* SEE DETAIL "C"

DETAIL "A"

HASH FILTER ASSY.

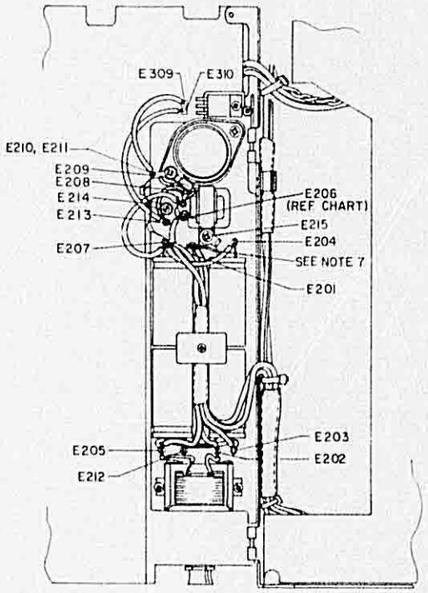

FIGURE 6-3C KX 165 FINAL ASSEMBLY
(Dwg. No. 300-02486-0001, R-25)
(Sheet 2 of 2)

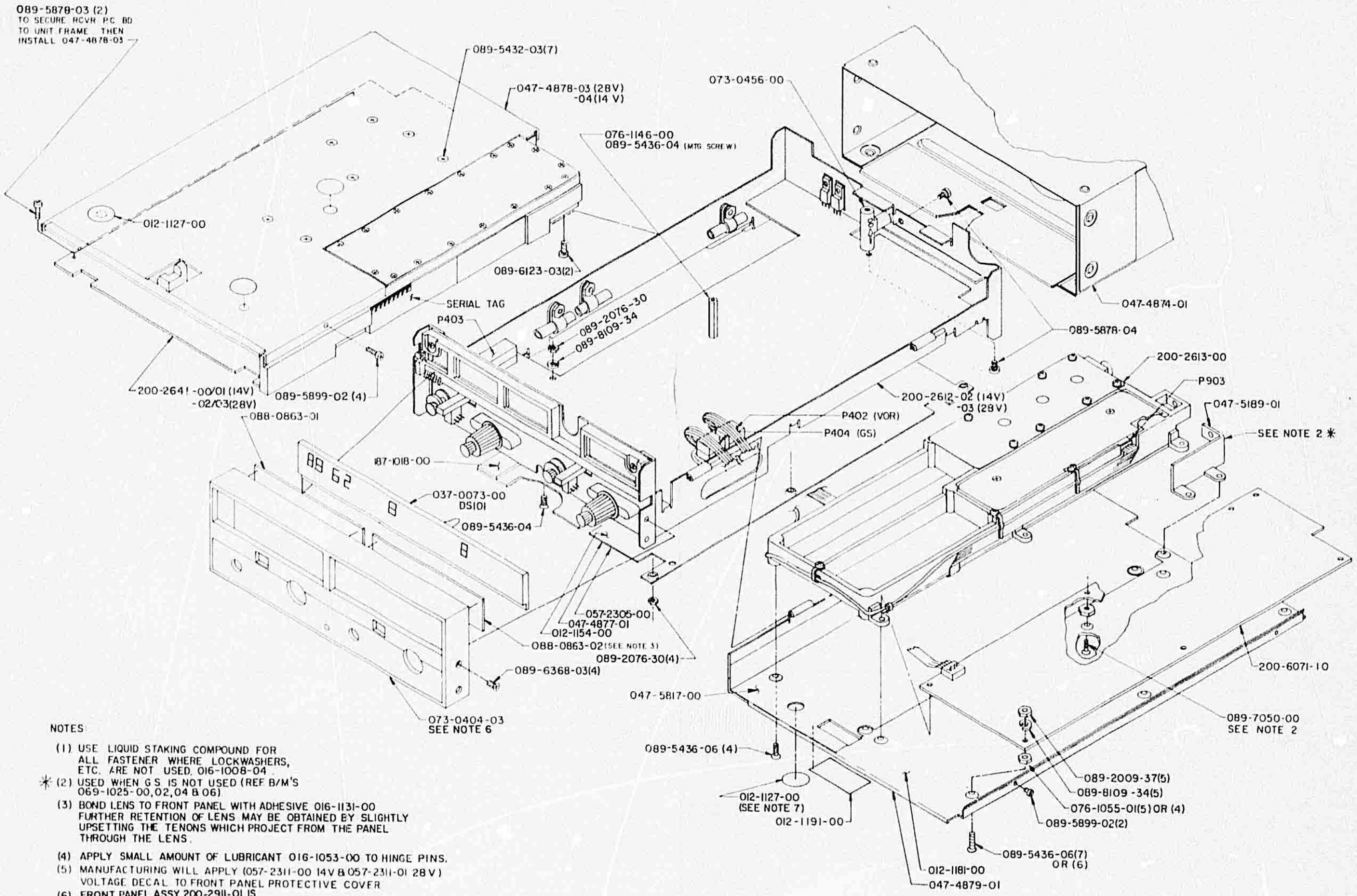

NOTES

(1) USE LIQUID STAKING COMPOUND FOR ALL FASTENER WHERE LOCKWASHERS, ETC. ARE NOT USED. 016-1008-04.

✳ (2) USED WHEN G S IS NOT USED (REF B/M'S 069-1025-00,02,04 & 06).

(3) BOND LENS TO FRONT PANEL WITH ADHESIVE 016-1131-00 FURTHER RETENTION OF LENS MAY BE OBTAINED BY SLIGHTLY UPSETTING THE TENONS WHICH PROJECT FROM THE PANEL THROUGH THE LENS.

(4) APPLY SMALL AMOUNT OF LUBRICANT 016-1053-00 TO HINGE PINS.

(5) MANUFACTURING WILL APPLY (057-2311-00 14V & 057-2311-01 28V) VOLTAGE DECAL TO FRONT PANEL PROTECTIVE COVER.

(6) FRONT PANEL ASSY 200-2911-01 IS AVAILABLE WITH LENS SECURED IN PANEL.

(7) APPLY 012-1127-00 TAG CVR TO ALL UNUSED SCREW HOLES AND ALL ALIGNMENT HOLES.

FIGURE 6-3B KX 165 FINAL ASSEMBLY
(Dwg. No. 300-02486-0001, R-22)
(Sheet 1 of 2)

NOTES

1. WIRE TIE DOWN IS 026-0001-00 26 GA BUSS WIRE WITH, 150-0003-10, INSULATIVE SLEEVING.
2. WATCH FOR PINCHING OF WIRES BETWEEN CAP & UNIT FRAME.
3. FOLD FLEX CABLE PROPERLY TO AVOID PINCHING (ALL FLEX CABLES).
4. SOLDER GROUND WIRE OF 150-0103-00, COAX TERMINATION, TO 008-0104-00, P.C. BD. TERMINATION CLIP, FOR GOOD GROUNDING, TYPICAL.
5. STRIP OUTER INSULATION, AND SOLDER BRAID TO FENCE OR BIFURCATED TERM. (E360) WHERE SHOWN.
6. STRIP OUTER INSULATION, AND SOLDER BRAID OF COAX TO CABLE TIE (008-0005-04) ON COMM. AND NAV COAX WHICH TERMINATES AT E350, E347, E348, E349.
7. SOLDER THIS LEAD OF CAPACITOR C1106 TO E201 IN 28 V RADIOS ONLY. IN 14 V RADIOS, SOLDER LEAD TO E215.

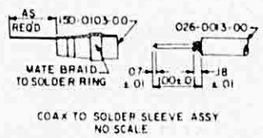

DETAIL "B"
14 VOLTS

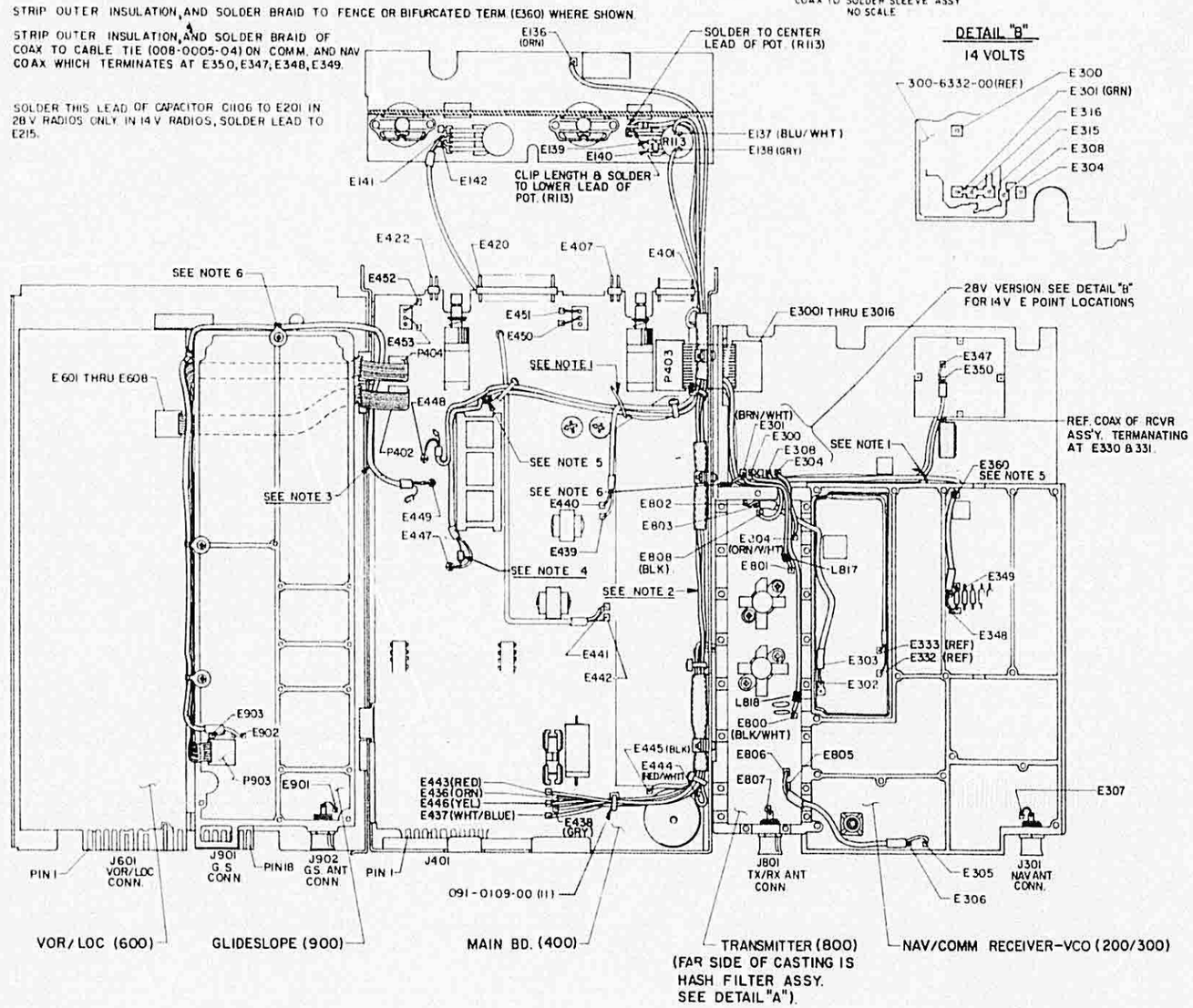

WIRING DIAGRAM (14 & 28V)					
FROM	TO	DESCRIPTION	KPN	FEET	VOLTS
E 136	E436	26 ORN	025-0001-03	1.25	14,28
E 137	E437	18 BLU/WHT	025-0005-16	1.16	14, 28
E 138	E438	18 GRY	025-0005-08	1.16	14, 28
E139/E140	E439/E440	COAX RG 178	026-0013-00	.63	14, 28
E141/E142	E441/E442	COAX RG 178	026-0013-00	.70	14, 28
E 201	E445	20 BLK	025-0004-00	.75	14,28
E 202	E443	18 RED	025-0005-02	.95	14,28
E 203	E446	26 YEL	025-0001-04	1.00	14,28
E 207	E444	20 RED/WHT	025-0004-12	.58	14,28
E347/E350	E447/GND	COAX RG 178	026-0013-00	1.58	14,28
E348/E349	E448/GND	COAX RG 178	026-0013-00	1.46	14,28
E449/GND	E902/E903	COAX RG 178	026-0013-00	1.50	14,28
E 206	E301	20 GRN	025-0004-05	.24	14
E 206	E209	20 GRN	025-0004-05	.14	28
E 209	E309	20 GRN/WHT	025-0004-15	.14	14,28
E 213	E310	26 WHT/YEL	025-0018-94	.20	14,28
E 300	E800	20 BLK/WHT	025-0004-10	.46	28
E 301	E801	20 BRN/WHT	025-0004-11	.16	28
E302/E303 GND	E802/E803 GND	COAX RG 178	026-0013-00	.39	14,28
E 304	E804	20 ORN/WHT	025-0004-13	.17	14,28
E305/E306 GND	E805/E806 GND	COAX RG 178	026-0013-00	.50	14,28
E 308	E808	20 BLK	025-0004-00	.11	14,28
E 316	E801	20 BRN/WHT	025-0004-11	.16	14
E 300	E800	20 BLK/WHT	025-0004-10	.52	14

DETAIL "A"
HASH FILTER ASSY.

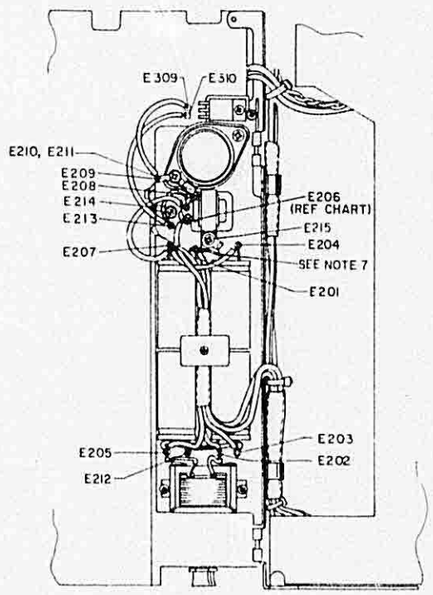

FIGURE 6-3B KX 165 FINAL ASSEMBLY
(Dwg. No. 300-02486-0001, R-22)
(Sheet 2 of 2)

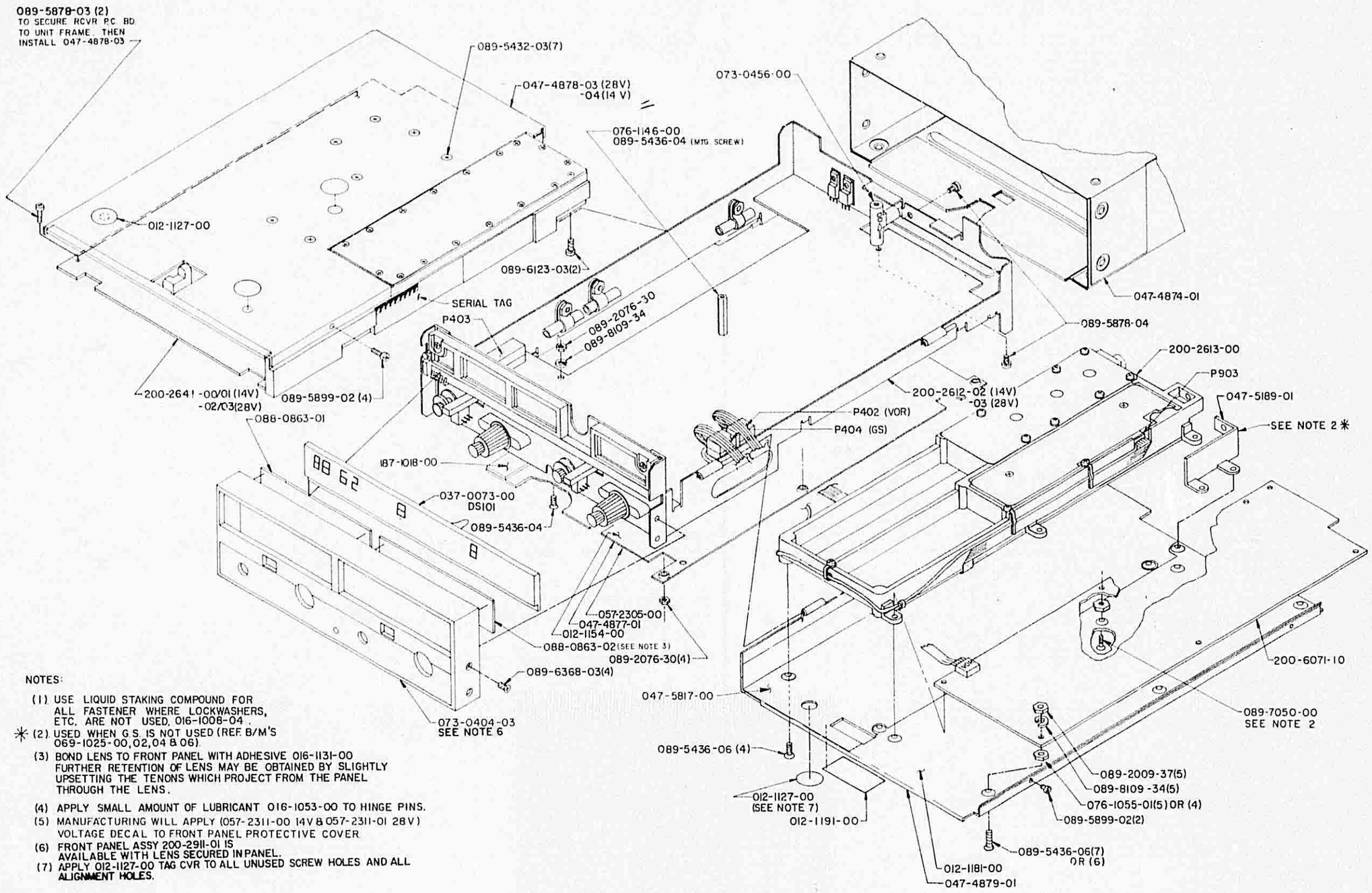

NOTES:

(1) USE LIQUID STAKING COMPOUND FOR ALL FASTENER WHERE LOCKWASHERS, ETC. ARE NOT USED. 016-1008-04.

✳ (2) USED WHEN G.S. IS NOT USED (REF. B/M'S 069-1025-00,02,04 & 06).

(3) BOND LENS TO FRONT PANEL WITH ADHESIVE 016-1131-00 FURTHER RETENTION OF LENS MAY BE OBTAINED BY SLIGHTLY UPSETTING THE TENONS WHICH PROJECT FROM THE PANEL THROUGH THE LENS.

(4) APPLY SMALL AMOUNT OF LUBRICANT 016-1053-00 TO HINGE PINS.

(5) MANUFACTURING WILL APPLY (057-2311-00 14V & 057-2311-01 28V) VOLTAGE DECAL TO FRONT PANEL PROTECTIVE COVER.

(6) FRONT PANEL ASSY 200-2911-01 IS AVAILABLE WITH LENS SECURED IN PANEL.

(7) APPLY 012-1127-00 TAG CVR TO ALL UNUSED SCREW HOLES AND ALL ALIGNMENT HOLES.

FIGURE 6-3A KX 165 FINAL ASSEMBLY
(Dwg. No. 300-02486-0001, R-21)
(Sheet 1 of 2)

NOTES

1. WIRE TIE DOWN IS 026-0001-00 26 GA. BUSS WIRE WITH, 150-0003-10, INSULATIVE SLEEVING.
2. WATCH FOR PINCHING OF WIRES BETWEEN CAP & UNIT FRAME.
3. FOLD FLEX CABLE PROPERLY TO AVOID PINCHING (ALL FLEX CABLES)
4. SOLDER GROUND WIRE OF 150-0103-00, COAX TERMINATION, TO 008-0104-00, P.C. BD. TERMINATION CLIP, FOR GOOD GROUNDING, TYPICAL.
5. STRIP OUTER INSULATION, AND SOLDER BRAID TO FENCE OR BIFURCATED TERM. (E360) WHERE SHOWN.
6. STRIP OUTER INSULATION, AND SOLDER BRAID OF COAX TO CABLE TIE (008-0005-04) ON COMM. AND NAV COAX WHICH TERMINATES AT E350, E347, E348, E349.
7. SOLDER THIS LEAD OF CAPACITOR C106 TO E201 IN 28 V. RADIOS ONLY. IN 14 V. RADIOS, SOLDER LEAD TO E215.

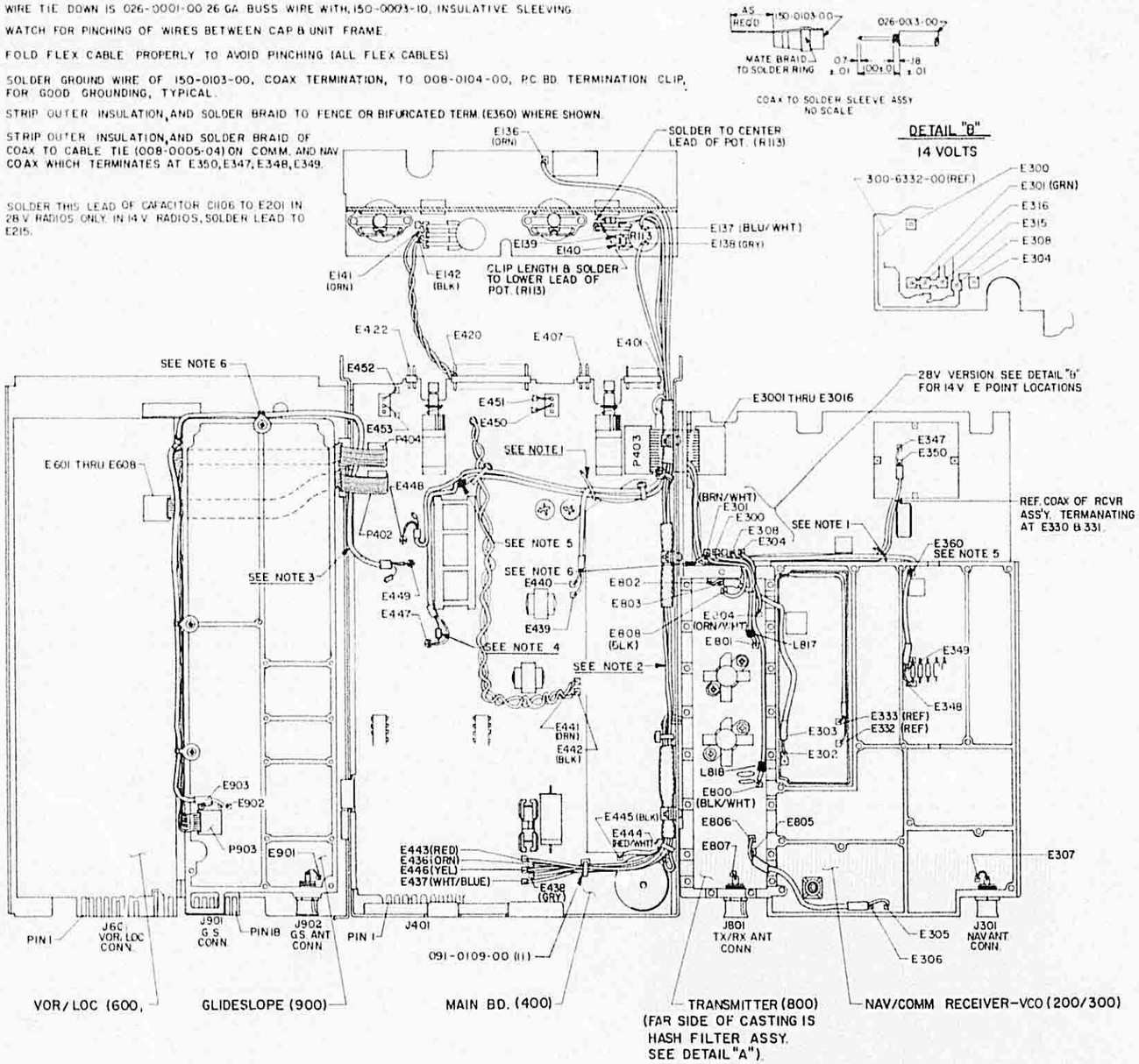

WIRING DIAGRAM (14 & 28V)					
FROM	TO	DESCRIPTION	KPN	FEET	VOLTS
E136	E436	26 ORN	025-0001-03	1.25	14, 28
E137	E437	18 BLU/WHT	025-0005-16	1.16	14, 28
E138	E438	18 GRY	025-0005-08	1.16	14, 28
E139/E140	E439/E440	COAX RG 178	026-0013-00	.63	14, 28
E141	E441	26 ORN	025-0001-03	.70	14, 28
E142	E442	26 BLK	025-0001-00	.70	14, 28
E201	E445	20 BLK	025-0004-00	.75	14, 28
E202	E443	18 RED	025-0005-02	.95	14, 28
E203	E446	26 YEL	025-0001-04	1.00	14, 28
E207	E444	20 RED/WHT	025-0004-12	.58	14, 28
E347/E350	E447/GND	COAX RG 178	026-0013-00	1.58	14, 28
E348/E349	E448/GND	COAX RG 178	026-0013-00	1.46	14, 28
E449/GND	E902/E903	COAX RG 178	026-0013-00	1.50	14, 28
E206	E301	20 GRN	025-0004-05	.24	14
E206	E209	20 GRN	025-0004-05	.14	28
E209	E309	20 GRN/WHT	025-0004-15	.14	14, 28
E213	E310	26 WHT/YEL	025-0018-94	.20	14, 28
E300	E800	20 BLK/WHT	025-0004-10	.46	28
E301	E801	20 BRN/WHT	025-0004-11	.16	28
E302/E303 GND	E802/E803 GND	COAX RG 178	026-0013-00	.39	14, 28
E304	E804	20 ORN/WHT	025-0004-13	.17	14, 28
E305/E306 GND	E805/E806 GND	COAX RG 178	026-0013-00	.50	14, 28
E308	E808	20 BLK	025-0004-00	.11	14, 28
E316	E801	20 BRN/WHT	025-0004-11	.16	14
E300	E800	20 BLK/WHT	025-0004-10	.52	14

DETAIL "A"

HASH FILTER ASSY.

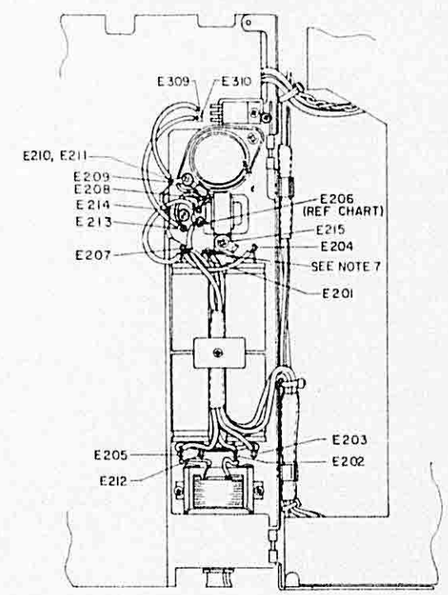

FIGURE 6-3A KX 165 FINAL ASSEMBLY
(Dwg. No. 300-02486-0001, R-21)
(Sheet 2 of 2)

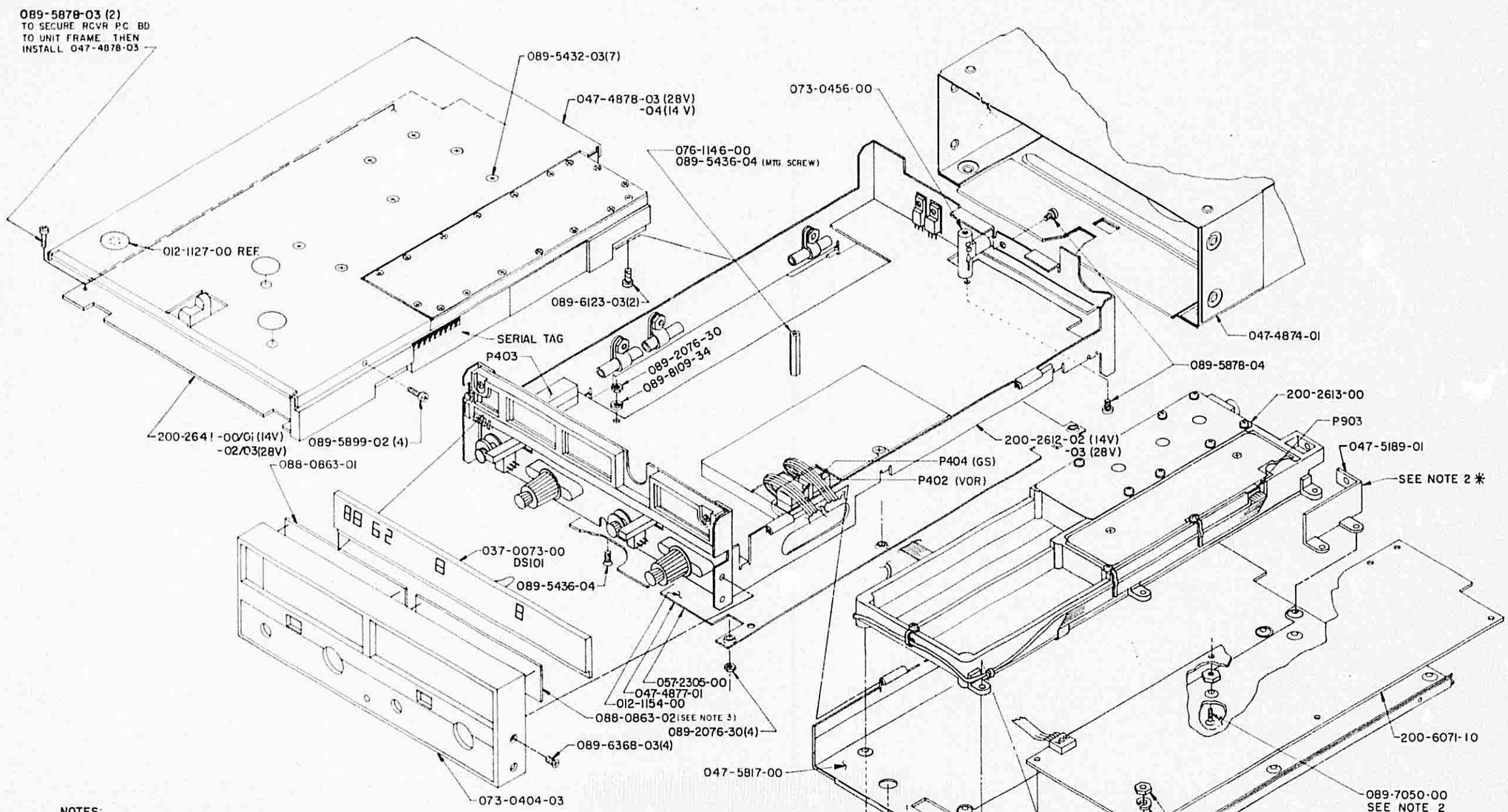

NOTES:

(1) USE LIQUID STAKING COMPOUND FOR ALL FASTENER WHERE LOCKWASHERS, ETC. ARE NOT USED, 016-1008-04

✳ (2) USED WHEN G.S. IS NOT USED (REF B/M'S 069-1025-00,02,04 & 06).

(3) BOND LENS TO FRONT PANEL WITH ADHESIVE 016-1131-00 FURTHER RETENTION OF LENS MAY BE OBTAINED BY SLIGHTLY UPSETTING THE TENONS WHICH PROJECT FROM THE PANEL THROUGH THE LENS.

(4) APPLY SMALL AMOUNT OF LUBRICANT 016-1053-00 TO HINGE PINS.

(5) MANUFACTURING WILL APPLY (057-2311-00 14V & 057-2311-01 28V) VOLTAGE DECAL TO FRONT PANEL PROTECTIVE COVER.

FIGURE 6-3 KX 165 FINAL ASSEMBLY
(Dwg. No. 300-02486-0001, R-12)
(Sheet 1 of 2)

NOTES

1. WIRE TIE DOWN IS 026-0001-00 26 GA. BUSS WIRE WITH, 150-0003-10, INSULATIVE SLEEVING.
2. WATCH FOR PINCHING OF WIRES BETWEEN CAP & UNIT FRAME.
3. FOLD FLEX CABLE PROPERLY TO AVOID PINCHING (ALL FLEX CABLES)
4. SOLDER GROUND WIRE OF 150-0103-00, COAX TERMINATION, TO 008-0104-00, P.C. BD. TERMINATION CLIP, FOR GOOD GROUNDING, TYPICAL.
5. STRIP OUTTER INSULATION, AND SOLDER BRAID TO FENCE OR BIFURCATED TERM. (E360) WHERE SHOWN.
6. STRIP OUTTER INSULATION, AND SOLDER BRAID OF COAX TO CABLE TIE (008-0005-04) ON COMM. COAX WHICH TERMINATES AT E350 & E347, AND GLIDESLOPE COAX WHICH TERMINATES AT E902 & E903, SOLDER 2 PLC'S.

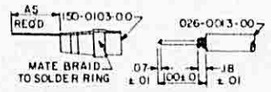

COAX TO SOLDER SLEEVE ASSY
NO SCALE

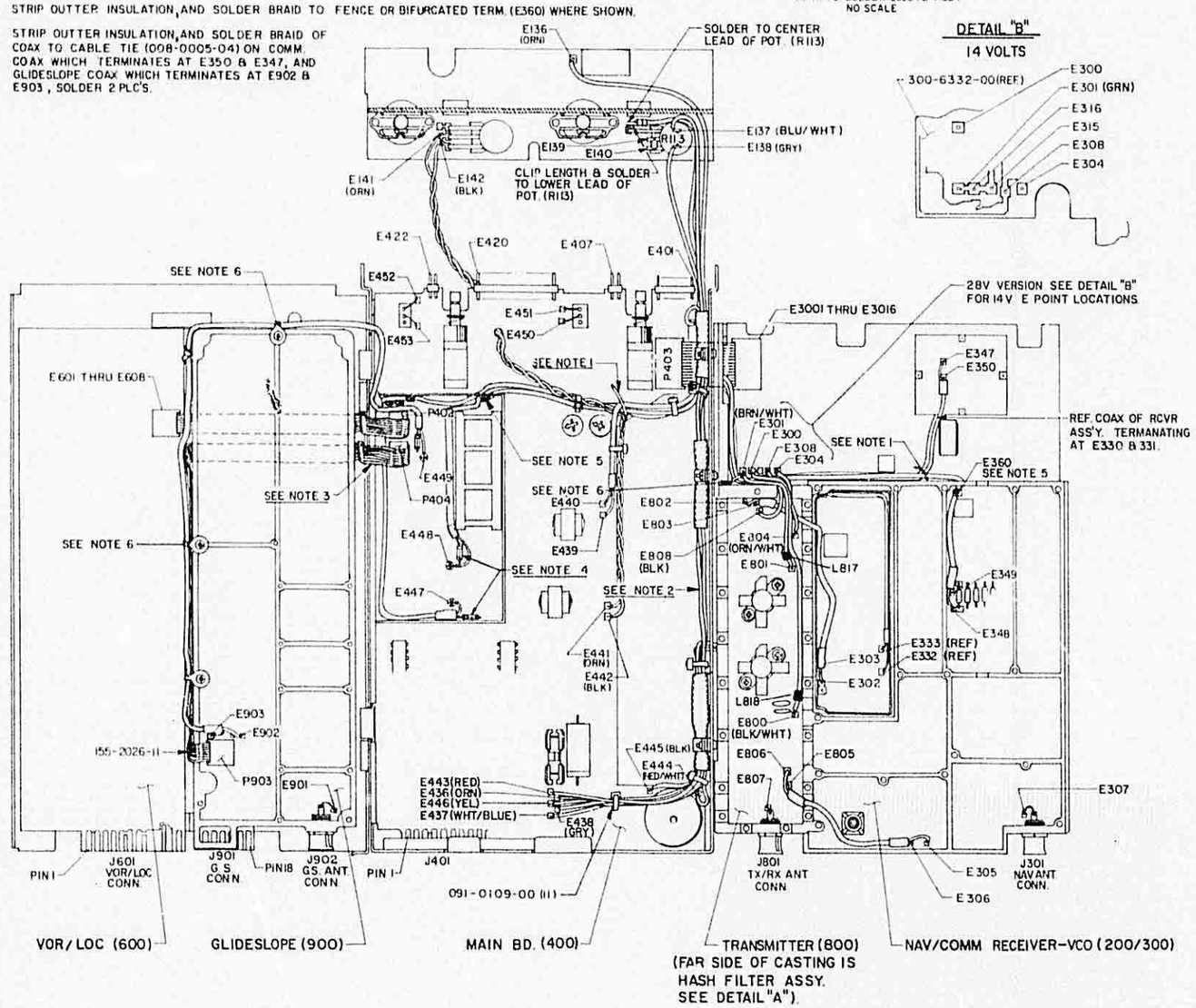

DETAIL "B"

14 VOLTS

WIRING DIAGRAM (14 & 28V)					
FROM	TO	DESCRIPTION	KPN	FEET	VOLTS
E136	E436	26 ORN	025-0001-03	1.25	14, 28
E137	E437	18 BLU/WHT	025-0005-16	1.16	14, 28
E138	E438	18 GRY	025-0005-08	1.16	14, 28
E139/E140	E439/E440	COAX RG178	026-0013-00	.63	14, 28
E141	E441	26 ORN	025-0001-03	.70	14, 28
E142	E442	26 BLK	025-0001-00	.70	14, 28
E201	E445	20 BLK	025-0004-00	.75	14, 28
E202	E443	18 RED	025-0005-02	.95	14, 28
E203	E446	26 YEL	025-0001-04	1.00	14, 28
E204	E444	20 RED/WHT	025-0004-12	.58	14, 28
E347/E350	E447/GND	COAX RG178	026-0013-00	1.58	14, 28
E348/E349	E448/GND	COAX RG178	026-0013-00	1.46	14, 28
E449/GND	E902/E903	COAX RG178	026-0013-00	1.50	14, 28
E206	E301	20 GRN	025-0004-05	.24	14
E206	E209	20 GRN	025-0004-05	.14	28
E209	E309	20 GRN/WHT	025-0004-15	.14	14, 28
E213	E310	26 YEL/WHT	025-0018-94	.20	14, 28
E300	E800	20 BLK/WHT	025-0004-10	.46	28
E301	E801	20 BRN/WHT	025-0004-11	.16	28
E302/E303 GND	E802/E803 GND	COAX RG178	026-0013-00	.39	14, 28
E304	E804	20 ORN/WHT	025-0004-13	.17	14, 28
E305/E306 GND	E805/E806 GND	COAX RG178	026-0013-00	.50	14, 28
E308	E808	20 BLK	025-0004-00	.11	14, 28
E316	E801	20 BRN/WHT	025-0004-11	.16	14
E300	E800	20 BLK/WHT	025-0004-10	.52	14

DETAIL "A"

HASH FILTER ASSY.

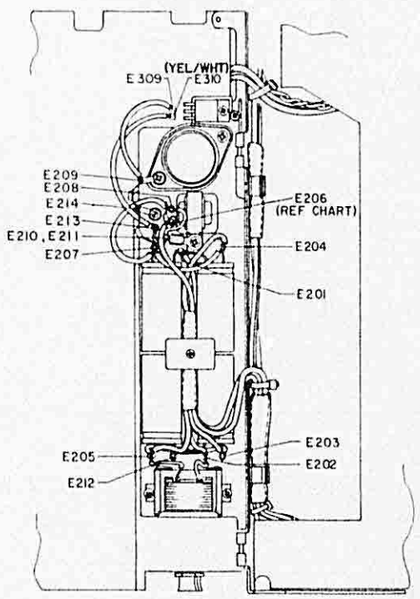

FIGURE 6-3 KX 165 FINAL ASSEMBLY
(Dwg. No. 300-02486-0001, R-12)
(Sheet 2 of 2)

200-02612-0000	MN CHAS KX155 14V	Rev 16
200-02612-0001	MN CHAS KX 155 28V	Rev 16
200-02612-0002	MN CHAS KX 165 14V	Rev 16
200-02612-0003	MN CHAS KX 165 28V	Rev 16
200-02612-0004	MN CHAS KX155 28V	Rev 1
200-02612-0099	COMMON BOM	Rev 16

SYMBOL	CAS PART NBR	DESCRIPTION	[UOM]	-0000	-0001	-0002	-0003	-0004	-0099
-	012-01005-0002	TAPE MYLAR .500 W	[IN]	.	.	.	.	.	1.5
-	012-01201-0000	INSULATOR MYLAR	[EA]	.	.	.	.	.	1
-	016-01082-0000	DC RTV 3145	[AR]	.	.	.	.	.	0
-	025-00017-0005	WIRE 30 GRN	[IN]	.	.	.	.	.	2.1
-	026-00003-0000	WIRE CU 22AWG TINNE	[IN]	1.2	1.2	.	.	1.2	.
-	030-02387-0000	PLUG DIP 8P	[EA]	1	1	.	.	1	.
-	047-04876-0002	UNIT FRAME	[EA]	.	.	.	.	.	1
-	047-05637-0001	P/S SHIELD W/F	[EA]	.	.	.	.	.	1
-	057-01540-0000	WARNING HV TAG	[EA]	.	.	.	.	.	2
-	057-02311-0000	VOLTAGE TAG 14V	[EA]	1	.	1	.	.	.
-	057-02311-0001	VOLTAGE TAG 28V	[EA]	.	1	.	1	1	.
-	076-00748-0003	SPACER .572	[EA]	.	.	.	.	.	1
-	088-00865-0001	PUSHBUTTON FNCT	[EA]	.	.	.	.	.	2
-	089-02003-0037	NUT FLAT 1-64	[EA]	.	.	.	.	.	4
-	089-02005-0037	NUT FLAT 2-56	[EA]	.	.	.	.	.	3
-	089-05523-0003	SCR FLHP 4-40X3/16	[EA]	.	.	.	.	.	2
-	089-05523-0005	SCR FLHP 4-40X5/16	[EA]	.	.	.	.	.	2
-	089-05872-0003	SCR PHP 1-64X3/16	[EA]	.	.	.	.	.	4
-	089-05874-0005	SCR PHP 2-56X5/16	[EA]	.	.	.	.	.	3
-	089-05878-0003	SCR PHP 4-40X3/16	[EA]	.	.	.	.	.	2
-	089-05878-0004	SCR PHP 4-40X1/4	[EA]	.	.	.	.	.	1
-	089-05899-0004	SCR PHP 2-56X1/4	[EA]	.	.	.	.	.	2
-	089-05903-0003	SCR PHP 4-40X3/16	[EA]	.	.	.	.	.	2
-	089-05903-0004	SCR PHP 4-40X1/4	[EA]	.	.	.	.	.	4
-	089-08162-0004	WSHR FLT RVT .096	[EA]	.	.	.	.	.	4
-	091-00072-0000	CABLE CLAMP 0	[EA]	.	.	.	.	.	3
-	091-00156-0000	BUSHING	[EA]	.	.	.	.	.	2
-	091-00606-0000	INSULATOR XSTR	[EA]	.	.	.	.	.	2
-	150-00024-0010	TUBING SHRINK 10G	[IN]	.	.	.	.	.	1.6
-	150-00025-0010	TUBING SHRINK 8G	[IN]	.	.	.	.	.	3.2
-	200-02612-0099	COMMON BOM	[EA]	1	1	1	1	1	.
-	200-06068-0010	DSPL BD KX 165	[EA]	.	.	1	1	.	.
-	200-06068-0011	DSPL BD KX 155	[EA]	1	1	.	.	.	.
-	200-06068-0012	DSPL BD KX155	[EA]	.	.	.	.	1	.
-	200-06069-0010	MAIN BOARD 28V	[EA]	.	1	.	1	.	.

SYMBOL	CAS PART NBR	DESCRIPTION	[UOM]	-0000	-0001	-0002	-0003	-0004	-0099
-	200-06069-0011	MAIN BOARD 14V	[EA]	1	.	1	.	.	.
-	200-06069-0012	MAIN BOARD 28V	[EA]	.	.	.	.	1	.
Q 402	007-00381-0002	XSTR NPN X44E236	[EA]	.	.	.	.	.	1
Q 405	007-00205-0000	XSTR PNP X45C613	[EA]	.	.	.	.	.	1
S 402	031-00372-0001	SWITCH SLIDE SPDT	[EA]	.	.	.	.	.	1
S 404	031-00372-0001	SWITCH SLIDE SPDT	[EA]	.	.	.	.	.	1

200-02612-0005	MAIN CHASSIS 14V	2
200-02612-0006	MAIN CHASSIS 28V	2
200-02612-0007	MAIN CHASSIS 14V	4
200-02612-0008	MAIN CHASSIS 28V	3
200-02612-0099	COMMON BOM	16

SYMBOL	CAS PART NBR	DESCRIPTION	[UOM]	-0005	-0006	-0007	-0008	-0099
-	012-01005-0002	TAPE MYLAR .500 W	[IN]	.	.	.	.	1.5
-	012-01201-0000	INSULATOR MYLAR	[EA]	.	.	.	.	1
-	016-01082-0000	DC RTV 3145	[AR]	.	.	.	.	0
-	025-00017-0005	WIRE 30 GRN	[IN]	.	.	.	.	2.1
-	026-00003-0000	WIRE CU 22AWG TINNE	[IN]	1.2	1.2	.	.	.
-	030-02387-0000	PLUG DIP 8P	[EA]	1	1	.	.	.
-	047-04876-0002	UNIT FRAME	[EA]	.	.	.	.	1
-	047-05637-0001	P/S SHIELD W/F	[EA]	.	.	.	.	1
-	057-01540-0000	WARNING HV TAG	[EA]	.	.	.	.	2
-	057-02311-0000	VOLTAGE TAG 14V	[EA]	1	.	1	.	.
-	057-02311-0001	VOLTAGE TAG 28V	[EA]	.	1	.	1	.
-	076-00748-0003	SPACER .572	[EA]	.	.	.	.	1
-	088-00865-0001	PUSHBUTTON FNCT	[EA]	.	.	.	.	2
-	089-02003-0037	NUT FLAT 1-64	[EA]	.	.	.	.	4
-	089-02005-0037	NUT FLAT 2-56	[EA]	.	.	.	.	3
-	089-05523-0003	SCR FLHP 4-40X3/16	[EA]	.	.	.	.	2
-	089-05523-0005	SCR FLHP 4-40X5/16	[EA]	.	.	.	.	2
-	089-05872-0003	SCR PHP 1-64X3/16	[EA]	.	.	.	.	4
-	089-05874-0005	SCR PHP 2-56X5/16	[EA]	.	.	.	.	3
-	089-05878-0003	SCR PHP 4-40X3/16	[EA]	.	.	.	.	2
-	089-05878-0004	SCR PHP 4-40X1/4	[EA]	.	.	.	.	1
-	089-05899-0004	SCR PHP 2-56X1/4	[EA]	.	.	.	.	2
-	089-05903-0003	SCR PHP 4-40X3/16	[EA]	.	.	.	.	2
-	089-05903-0004	SCR PHP 4-40X1/4	[EA]	.	.	.	.	4
-	089-08162-0004	WSHR FLT RVT .096	[EA]	.	.	.	.	4
-	091-00072-0000	CABLE CLAMP 0	[EA]	.	.	.	.	3
-	091-00156-0000	BUSHING	[EA]	.	.	.	.	2
-	091-00606-0000	INSULATOR XSTR	[EA]	.	.	.	.	2
-	150-00024-0010	TUBING SHRINK 10G	[IN]	.	.	.	.	1.6
-	150-00025-0010	TUBING SHRINK 8G	[IN]	.	.	.	.	3.2
-	200-02612-0099	COMMON BOM	[EA]	1	1	1	1	.
-	200-06068-0010	DSPL BD KX 165	[EA]	.	.	1	1	.
-	200-06068-0011	DSPL BD KX 155	[EA]	1	1	.	.	.
-	200-06069-0013	MAIN BD 28V	[EA]	.	0.5	.	0.5	.
-	200-06069-0014	MAIN BD 14V	[EA]	0.5	.	0.5	.	.
-	200-06069-0020	MAIN BD 14V KX155	[EA]	0.5	.	0.5	.	.

SYMBOL	CAS PART NBR	DESCRIPTION	[UOM]	-0005	-0006	-0007	-0008	-0099
-	200-06069-0021	MAIN BD 28V	[EA]	.	0.5	.	0.5	.
Q 402	007-00381-0002	XSTR NPN X44E236	[EA]	.	.	.	.	1
Q 405	007-00205-0000	XSTR PNP X45C613	[EA]	.	.	.	.	1
S 402	031-00372-0001	SWITCH SLIDE SPDT	[EA]	.	.	.	.	1
S 404	031-00372-0001	SWITCH SLIDE SPDT	[EA]	.	.	.	.	1

NOTES:
1. USE LIQUID STAKING COMPOUND FOR ALL FASTENER WHERE LOCKWASHERS, ETC. ARE NOT USED.
2. INSPECT TO ASSURE THAT PLATING IS REMOVED FROM ALL 4 PINS BEFORE ASS'Y.
3. INSPECT TO ASSURE THAT PINS ARE OF DIFFERENT LENGTHS.
4. ASSEMBLE MAIN BD. (200-6069-00/01) AND DISPLAY BD. (200-6068-00) TO UNIT FRAME (047-4876-02) SECURLY BEFORE SOLDERING RIGHT ANGLE HEADER PIN TO DISPLAY BD.

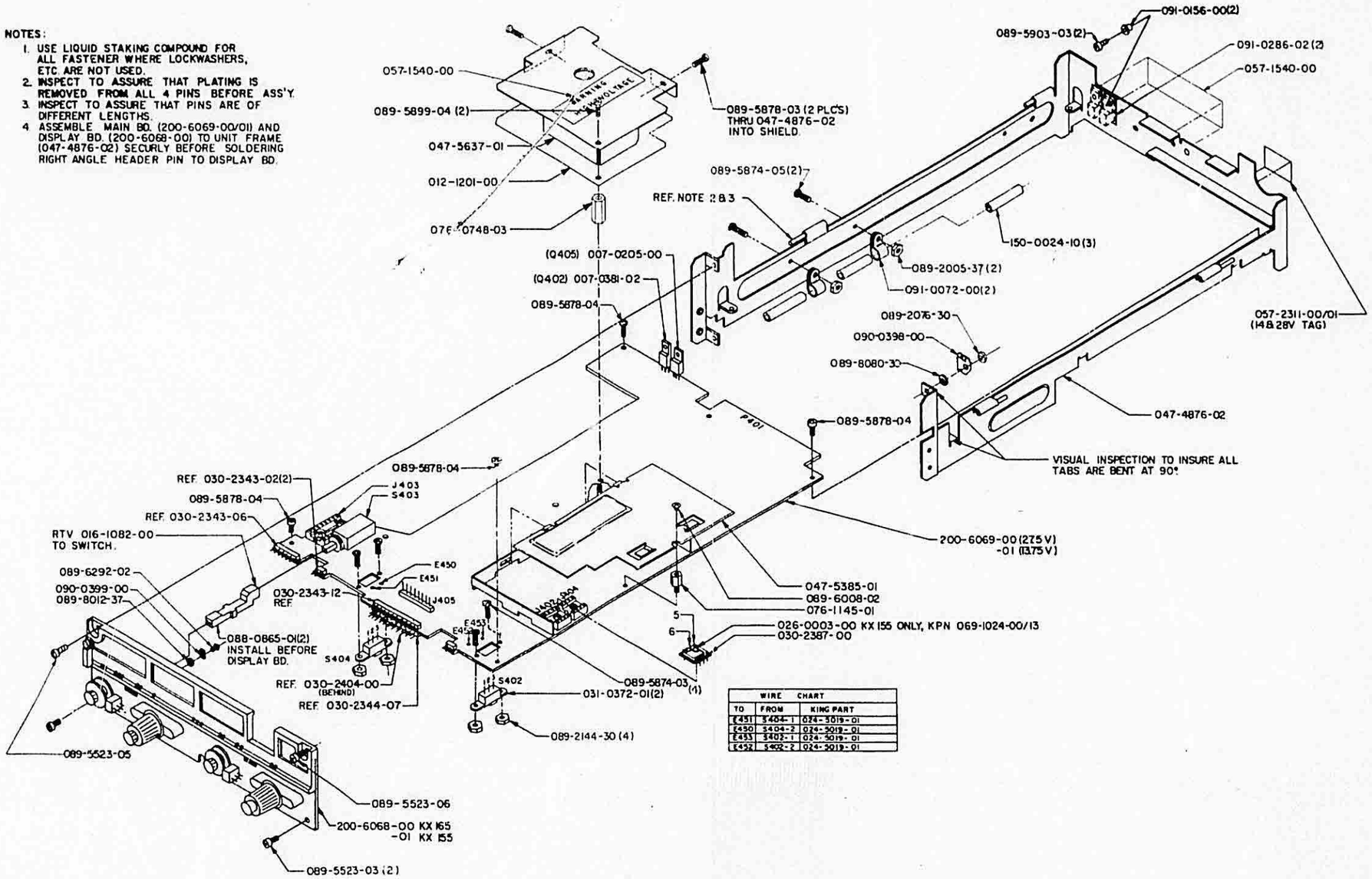

WIRE CHART

TO	FROM	KING PART
E451	S404-1	024-3019-01
E450	S404-2	024-3019-01
E453	S402-1	024-3019-01
E452	S402-2	024-3019-01

FIGURE 6-4D Main Chassis Assembly
(Dwg. No. 300-02612-0000, Rev. 14, sheet 1 of 1)

NOTES:
1. USE LIQUID STAKING COMPOUND FOR ALL FASTENER WHERE LOCKWASHERS, ETC. ARE NOT USED.
2. INSPECT TO ASSURE THAT PLATING IS REMOVED FROM ALL 4 PINS BEFORE ASS'Y.
3. INSPECT TO ASSURE THAT PINS ARE OF DIFFERENT LENGTHS.
4. ASSEMBLE MAIN BD. (200-6069-00/01) AND DISPLAY BD. (200-6068-00) TO UNIT FRAME (047-4876-02) SECURLY BEFORE SOLDERING RIGHT ANGLE HEADER PIN TO DISPLAY BD.

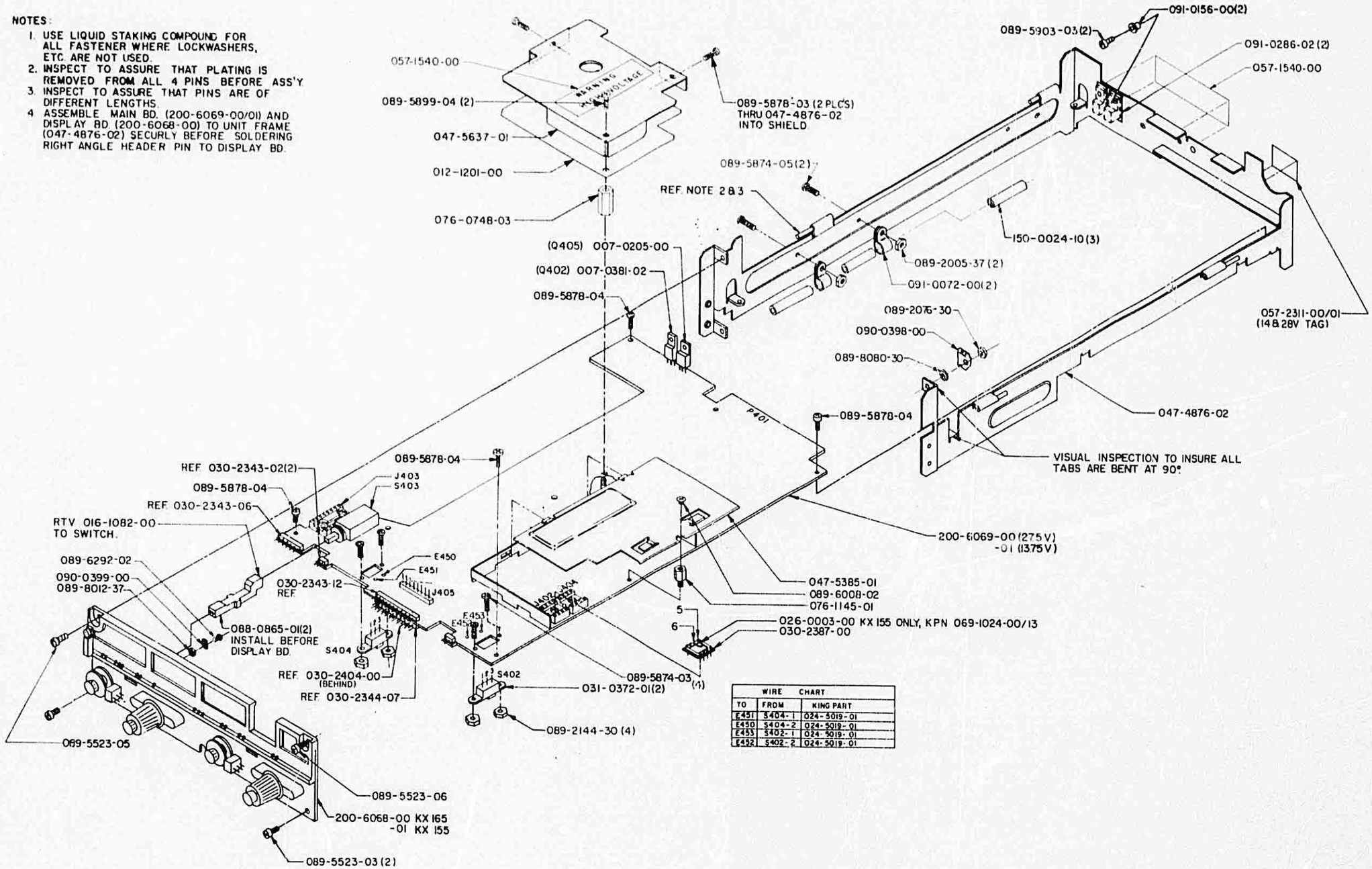

WIRE CHART		
TO	FROM	KING PART
E451	S404-1	024-5019-01
E450	S404-2	024-5019-01
E453	S402-1	024-5019-01
E452	S402-2	024-5019-01

FIGURE 6-4C MAIN CHASSIS ASSEMBLY
(Dwg. No. 300-02612-0000, R-12)

NOTES:
1. USE LIQUID STAKING COMPOUND FOR ALL FASTENER WHERE LOCKWASHERS, ETC. ARE NOT USED.
2. INSPECT TO ASSURE THAT PLATING IS REMOVED FROM ALL 4 PINS BEFORE ASS'Y.
3. INSPECT TO ASSURE THAT PINS ARE OF DIFFERENT LENGTHS.
4. ASSEMBLE MAIN BD. (200-6069-00/01) AND DISPLAY BD. (200-6068-00) TO UNIT FRAME (047-4876-02) SECURLY BEFORE SOLDERING RIGHT ANGLE HEADER PIN TO DISPLAY BD.

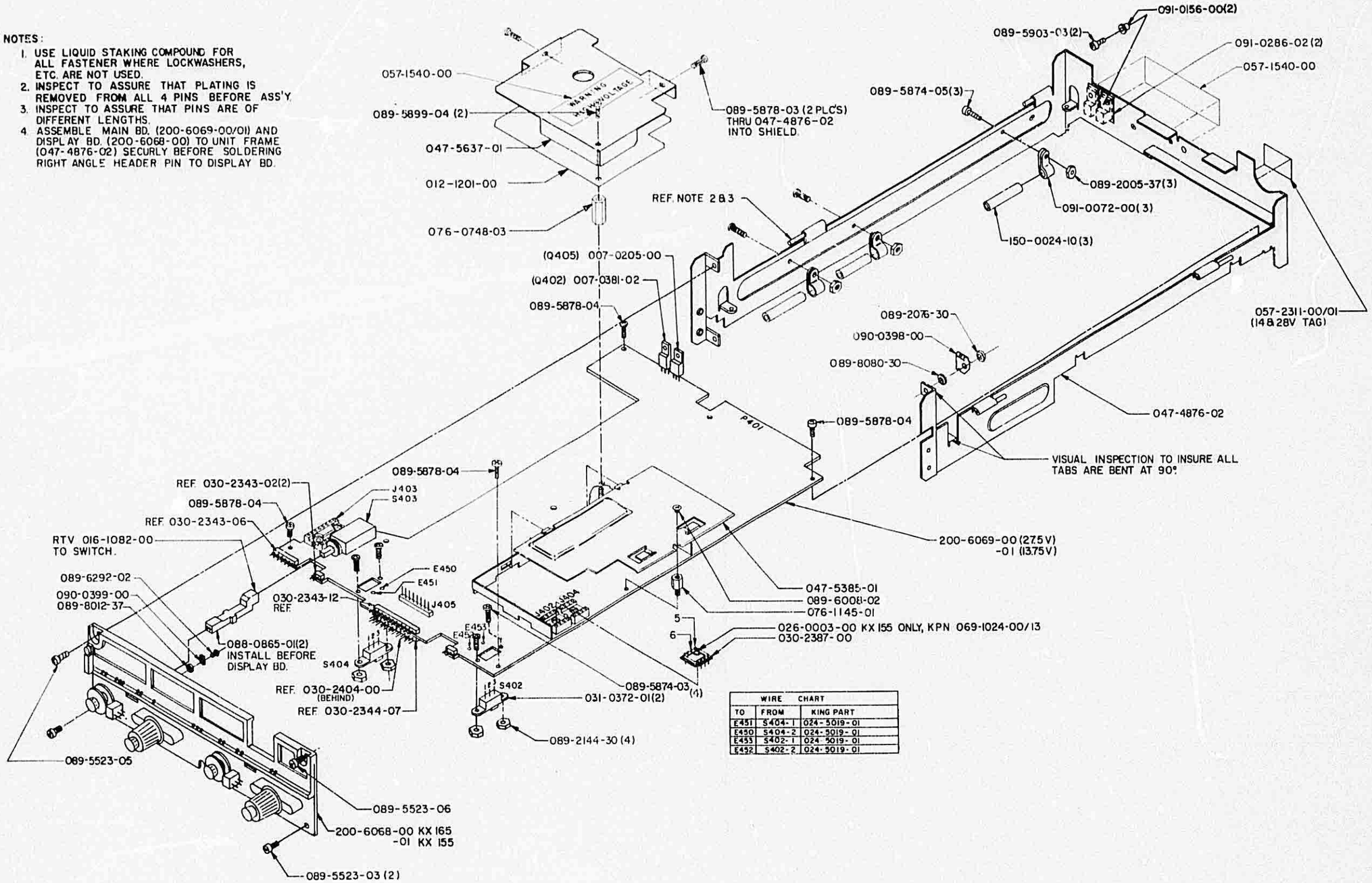

WIRE CHART		
TO	FROM	KING PART
E451	S404-1	024-5019-01
E450	S404-2	024-5019-01
E453	S402-1	024-5019-01
E452	S402-2	024-5019-01

FIGURE 6-4B MAIN CHASSIS ASSEMBLY
(Dwg. No. 300-02612-0000, R-11)

NOTES:
1. USE LIQUID STAKING COMPOUND FOR ALL FASTENER WHERE LOCKWASHERS, ETC. ARE NOT USED.
2. INSPECT TO ASSURE THAT PLATING IS REMOVED FROM ALL 4 PINS BEFORE ASS'Y.
3. INSPECT TO ASSURE THAT PINS ARE OF DIFFERENT LENGTHS.
4. ASSEMBLE MAIN BD. (200-6069-00/01) AND DISPLAY BD. (200-6068-00) TO UNIT FRAME (047-4876-02) SECURLY BEFORE SOLDERING RIGHT ANGLE HEADER PIN TO DISPLAY BD.

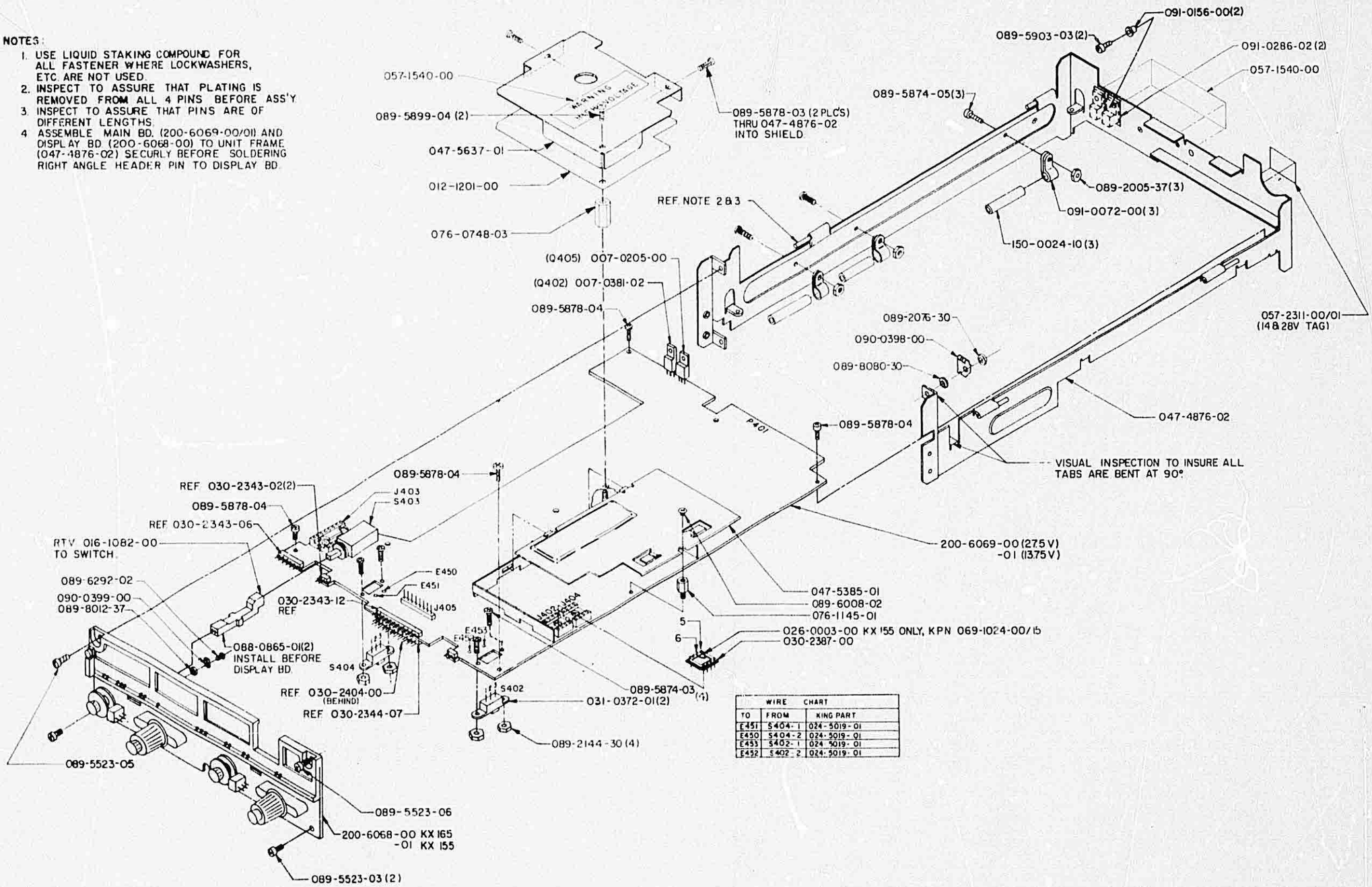

WIRE CHART		
TO	FROM	KING PART
E451	S404-1	024-5019-01
E450	S404-2	024-5019-01
E453	S402-1	024-5019-01
E452	S402-2	024-5019-01

FIGURE 6-4A MAIN CHASSIS ASSEMBLY
(Dwg. No. 300-02612-0000, R-10)

NOTES:
1. USE LIQUID STAKING COMPOUND FOR ALL FASTENER WHERE LOCKWASHERS, ETC. ARE NOT USED.
2. INSPECT TO ASSURE THAT PLATING IS REMOVED FROM ALL 4 PINS BEFORE ASS'Y.
3. INSPECT TO ASSURE THAT PINS ARE OF DIFFERENT LENGTHS.
4. ASSEMBLE MAIN BD. (200-6069-00/01) AND DISPLAY BD. (200-6068-00) TO UNIT FRAME (047-4876-02) SECURLY BEFORE SOLDERING RIGHT ANGLE HEADER PIN TO DISPLAY BD.

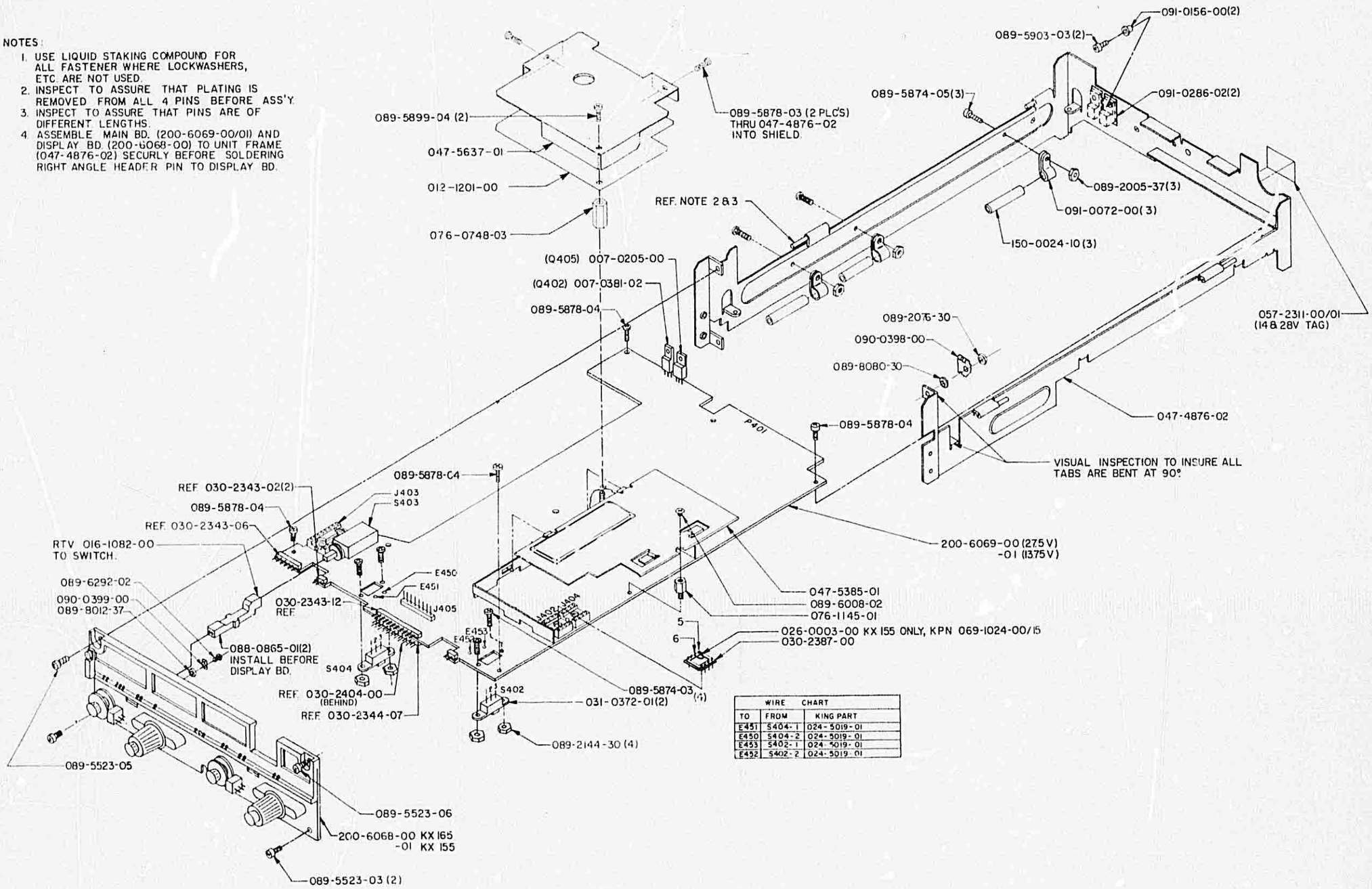

WIRE CHART

TO	FROM	KING PART
E451	S404-1	024-5019-01
E450	S404-2	024-5019-01
E453	S402-1	024-5019-01
E452	S402-2	024-5019-01

FIGURE 6-4 MAIN CHASSIS ASSEMBLY
(Dwg. No. 300-02612-0000, R-9)

NOTES:

1. USE LIQUID STAKING COMPOUND FOR ALL FASTENER WHERE LOCKWASHERS, ETC. ARE NOT USED.
2. INSPECT TO ASSURE THAT PLATING IS REMOVED FROM ALL 4 PINS BEFORE ASS'Y.
3. INSPECT TO ASSURE THAT PINS ARE OF DIFFERENT LENGTHS.
4. ASSEMBLE MAIN BD. (200-6069-10/11) AND DISPLAY BD. (200-6068-10) TO UNIT FRAME (047-4876-02) SECURLY BEFORE SOLDERING RIGHT ANGLE HEADER PIN TO DISPLAY BD.
5. REF. MOUNT OF SOFTWARE LABEL 057-3531-65 USED ON 200-2612-05,07 (14v) 057-5005-48 USED ON 200-2612-06,08 (28v).
6. REF. MOUNT OF IDENT LABEL 057-2241-00 USED ON 200-2612-05 THRU -08.

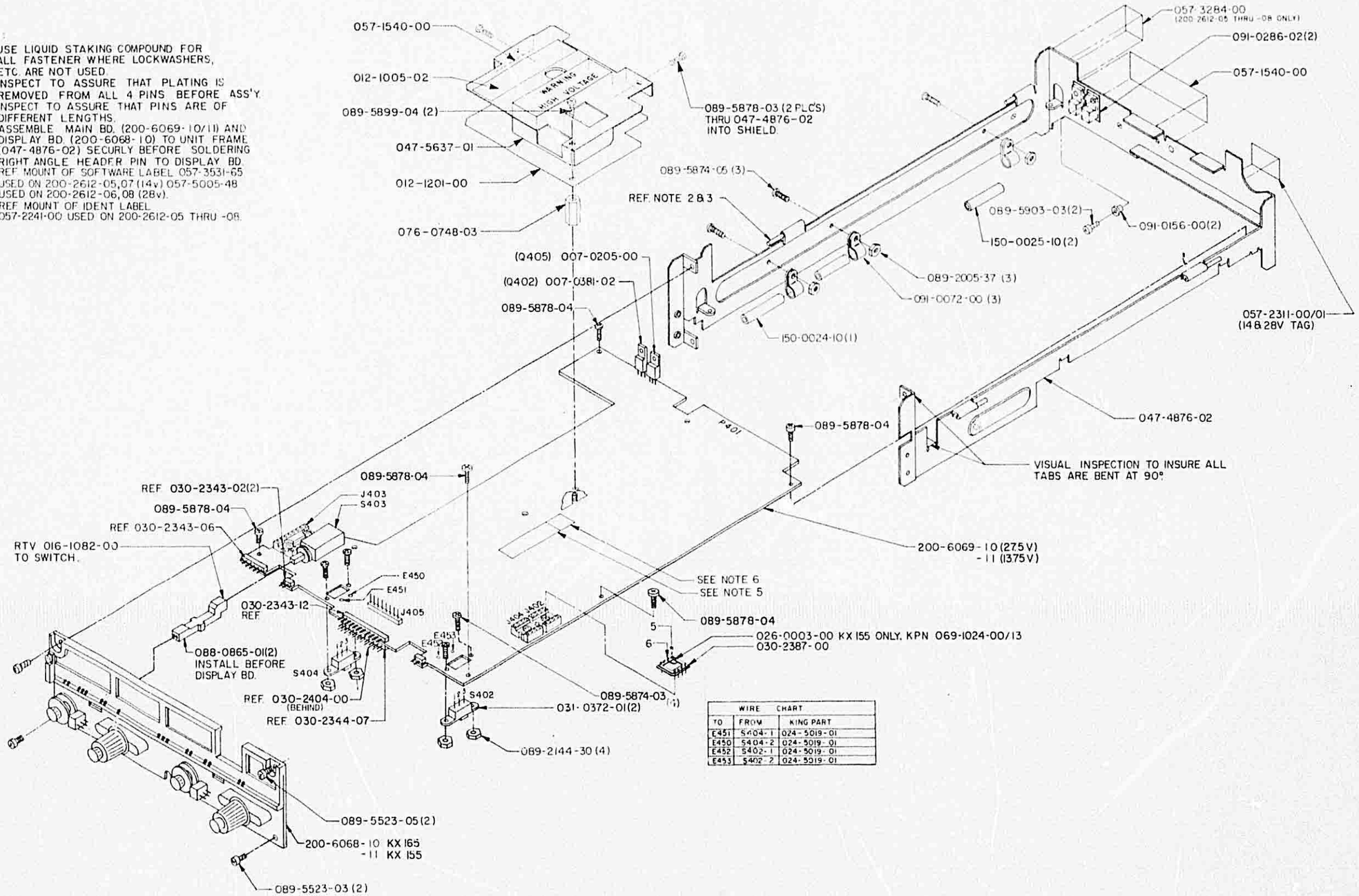

WIRE CHART		
TO	FROM	KING PART
E451	S404-1	024-5019-01
E450	S404-2	024-5019-01
E452	S402-1	024-5019-01
E453	S402-2	024-5019-01

FIGURE 6-5C MAIN CHASSIS ASSEMBLY
(Dwg. No. 300-02612-0010, R-22)

NOTES:
1. USE LIQUID STAKING COMPOUND FOR ALL FASTENER WHERE LOCKWASHERS, ETC. ARE NOT USED.
2. INSPECT TO ASSURE THAT PLATING IS REMOVED FROM ALL 4 PINS BEFORE ASS'Y.
3. INSPECT TO ASSURE THAT PINS ARE OF DIFFERENT LENGTHS.
4. ASSEMBLE MAIN BD. (200-6069-10/11) AND DISPLAY BD. (200-6068-10) TO UNIT FRAME (047-4876-02) SECURLY BEFORE SOLDERING RIGHT ANGLE HEADER PIN TO DISPLAY BD.

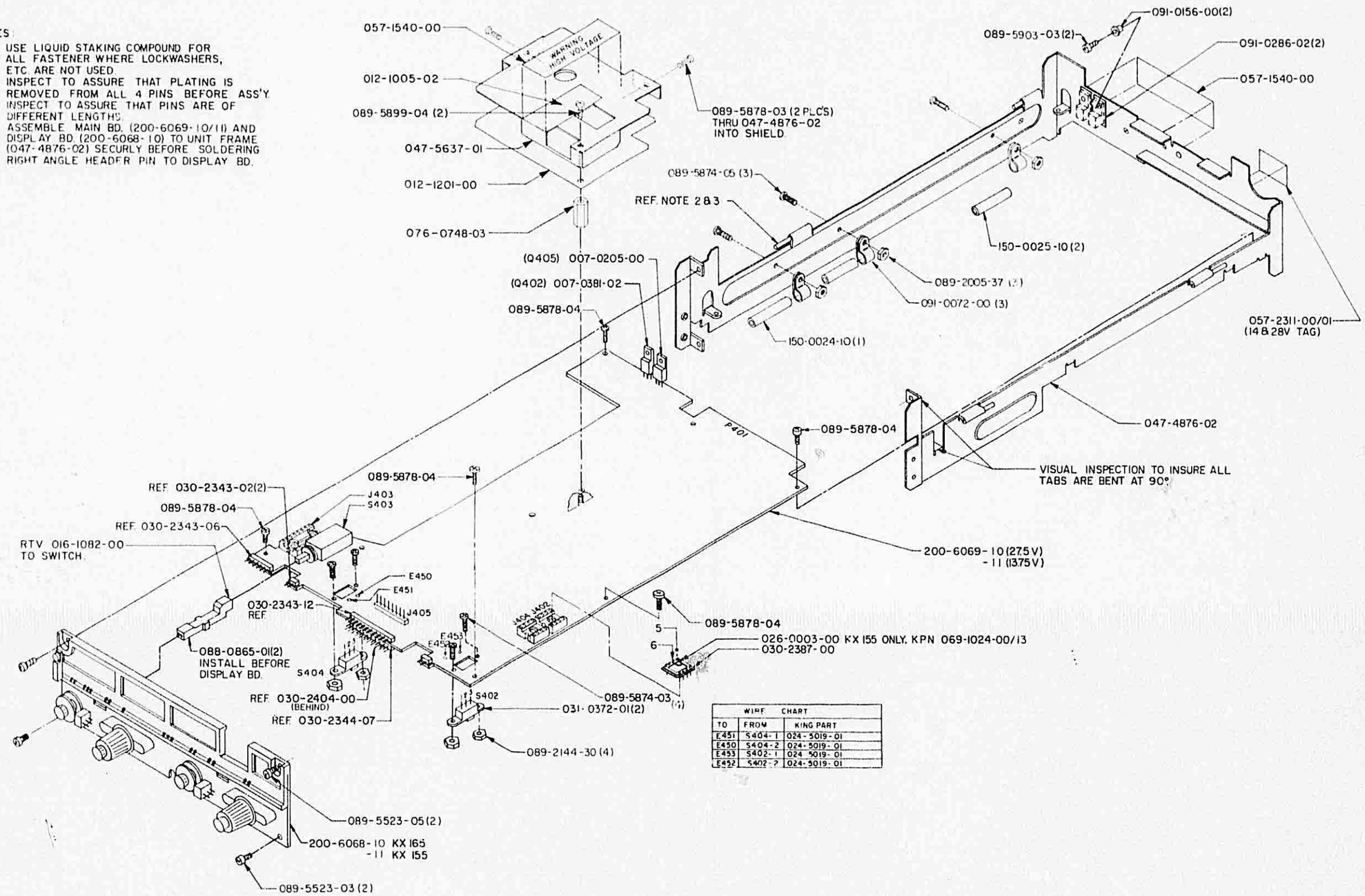

WIRE CHART		
TO	FROM	KING PART
E451	S404-1	024-5019-01
E450	S404-2	024-5019-01
E453	S402-1	024-5019-01
E452	S402-2	024-5019-01

FIGURE 6-5B MAIN CHASSIS ASSEMBLY
(Dwg. No. 300-02612-0010, R-18)

NOTES:

1. USE LIQUID STAKING COMPOUND FOR ALL FASTENER WHERE LOCKWASHERS, ETC ARE NOT USED.
2. INSPECT TO ASSURE THAT PLATING IS REMOVED FROM ALL 4 PINS BEFORE ASS'Y.
3. INSPECT TO ASSURE THAT PINS ARE OF DIFFERENT LENGTHS.
4. ASSEMBLE MAIN BD. (200-6069-10/11) AND DISPLAY BD. (200-6068-10) TO UNIT FRAME (047-4876-02) SECURLY BEFORE SOLDERING RIGHT ANGLE HEADER PIN TO DISPLAY BD.

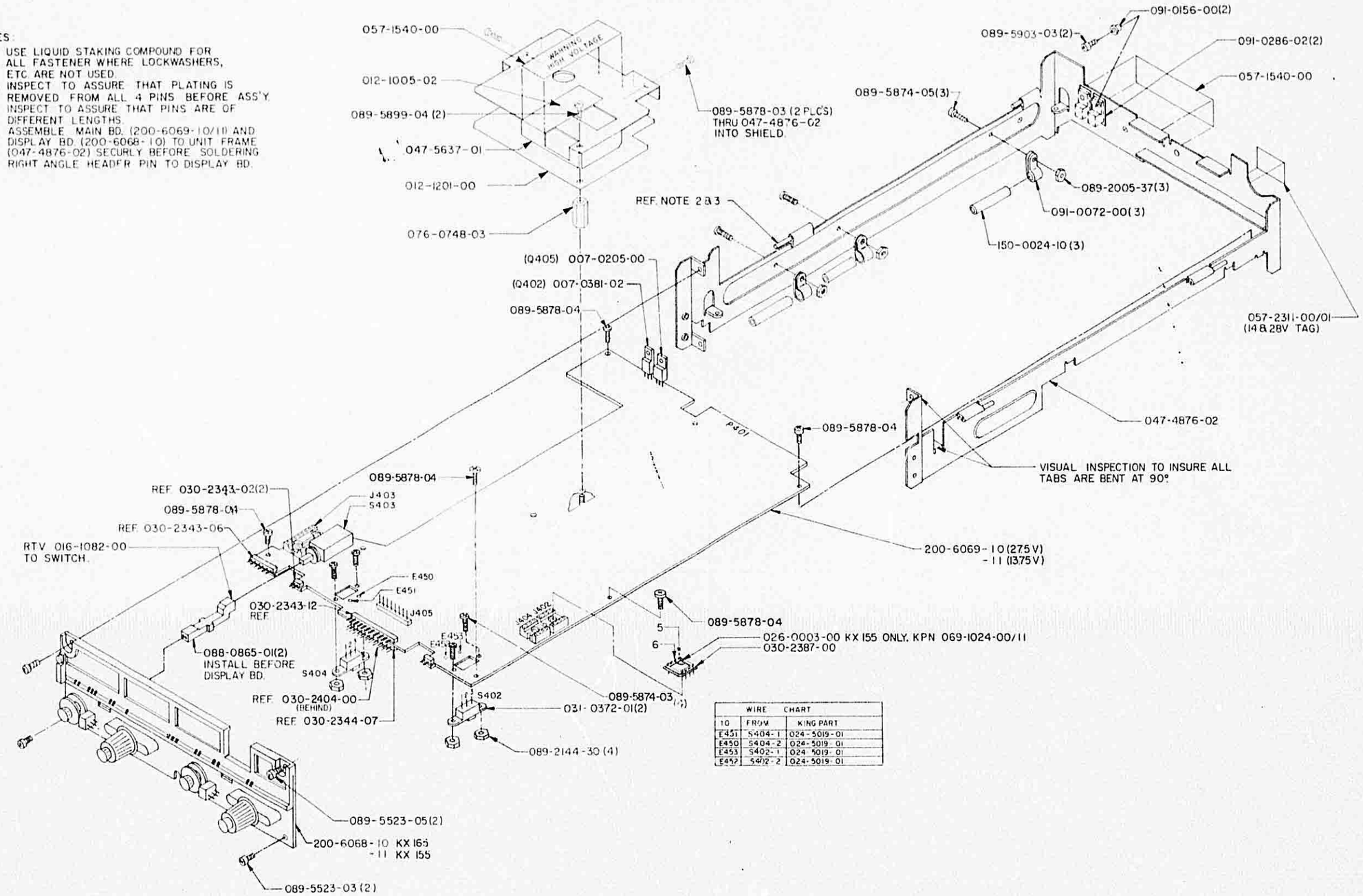

WIRE CHART		
TO	FROM	KING PART
E451	S404-1	024-5019-01
E450	S404-2	024-5019-01
E453	S402-1	024-5019-01
E452	S402-2	024-5019-01

FIGURE 6-5A MAIN CHASSIS ASSEMBLY
(Dwg. No. 300-02612-0010, R-15)

NOTES:
1. USE LIQUID STAKING COMPOUND FOR ALL FASTENER WHERE LOCKWASHERS, ETC ARE NOT USED
2. INSPECT TO ASSURE THAT PLATING IS REMOVED FROM ALL 4 PINS BEFORE ASS'Y
3. INSPECT TO ASSURE THAT PINS ARE OF DIFFERENT LENGTHS
4. ASSEMBLE MAIN BD. (200-6069-10/11) AND DISPLAY BD (200-6068-10) TO UNIT FRAME (047-4876-02) SECURI Y BEFORE SOLDERING RIGHT ANGLE HEADER P/N TO DISPLAY BD.

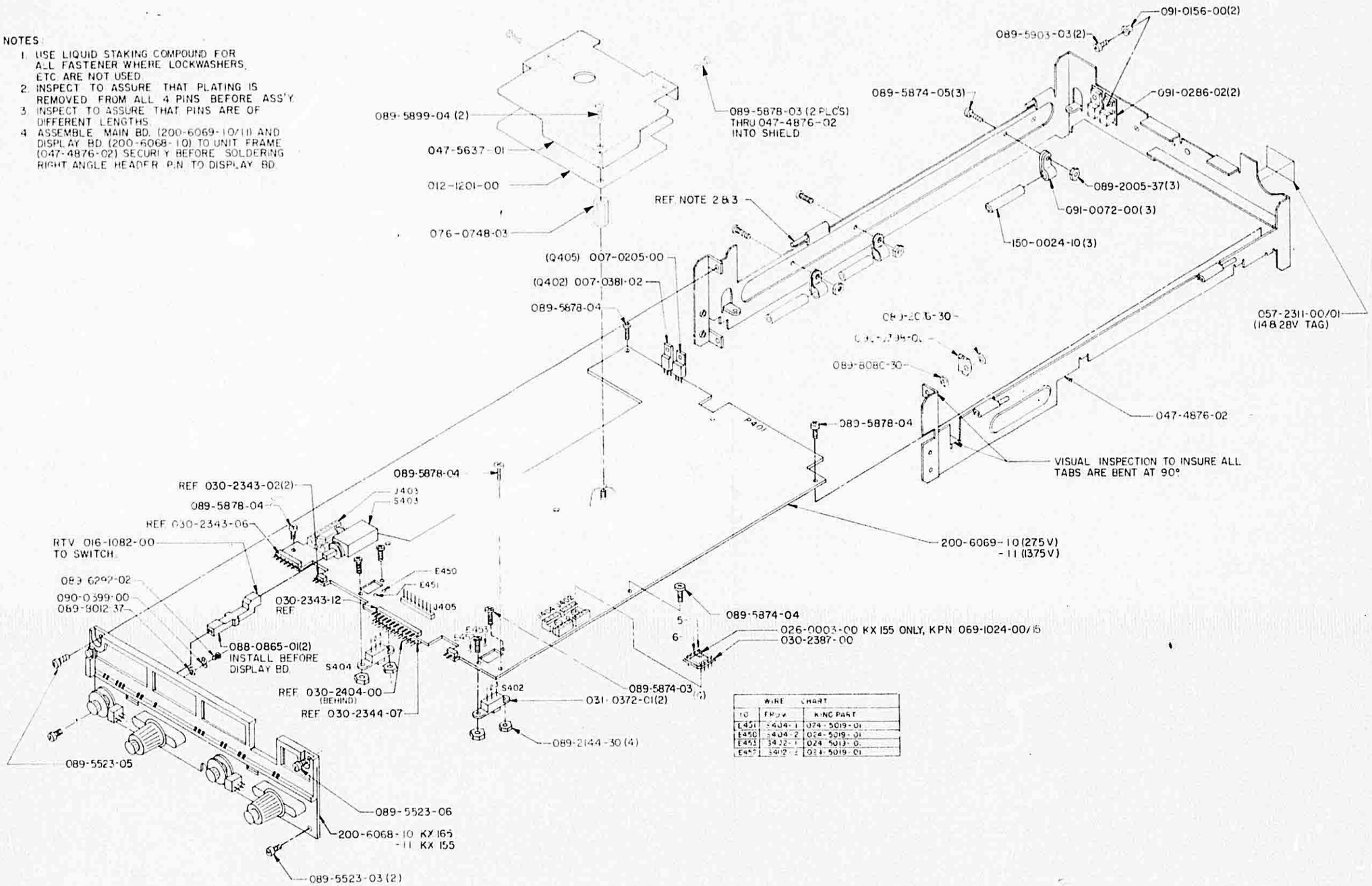

WIRE CHART		
TO	FROM	KING PART
E451	S404-1	024-5019-01
E450	S404-2	024-5019-01
E453	S402-1	024-5019-01
E452	S402-2	024-5019-01

FIGURE 6-5 MAIN CHASSIS ASSEMBLY
(Dwg. No. 300-02612-0010, R-10)

200-02613-0000	GLIDESLOPE	19
200-02613-0001	GLIDESLOPE ASSY KX155A	5
200-02613-0002	GLIDESLOPE RECEIVER ASSY	-

SYMBOL	CAS PART NBR	DESCRIPTION	[UOM]	-0000	-0001
-	008-00005-0004	TND COP LUG	[EA]	5	2
-	012-01152-0000	INSULATOR	[EA]	1	1
-	012-01153-0000	INSULATOR	[EA]	1	1
-	012-01173-0000	INSULATOR	[EA]	1	1
-	012-01602-0000	TAPE PAPER DOUBLED SI	[EA]		1
-	016-01134-0002	COPPER TAPE .50 IN	[IN]		14
-	016-01144-0000	TAK PAK ADV 122-92	[AR]	1	
-	016-01144-0001	ACCELERATOR 11525	[AR]	1	
-	025-00002-0003	WIRE 24 ORN	[IN]		12
-	026-00013-0000	WIRE COAX RG-178B/U	[IN]	18	12
-	030-00152-0000	CONN BNC HEX	[EA]	-	1
-	047-04903-0002	SHIELD COMPLETE	[EA]	1	1
-	047-04904-0002	GS FARSIDE SHIELD	[EA]	1	1
-	047-05190-0002	CVR GS	[EA]	1	1
-	047-05394-0002	GS FENCE COVER	[EA]	1	1
-	073-00403-0002	GS CSTG	[EA]	1	1
-	076-01149-0001	COVER SPACER .490	[EA]	2	2
-	089-05874-0003	SCR PHP 2-56X3/16	[EA]	8	8
-	089-05899-0003	SCR PHP 2-56X3/16	[EA]	4	2
-	089-05899-0004	SCR PHP 2-56X1/4	[EA]	14	14
-	089-05923-0003	SCR BHP 2-56X3/16	[EA]	2	2
-	089-06004-0003	SCR FHP 2-56X3/16	[EA]	2	2
-	089-08012-0037	WSHR INTL LK #2	[EA]	15	16
-	089-08033-0030	WSHR INTL LK .391	[EA]	1	1
-	150-00103-0000	SLDR SLEEVE	[EA]	2	1
-	155-02026-0016	JMPR CA ASSY 8P	[EA]	1	1
-	200-06072-0020	GLIDESLOPE BD	[EA]	1	1
J 902	030-00152-0000	CONN BNC HEX	[EA]	1	

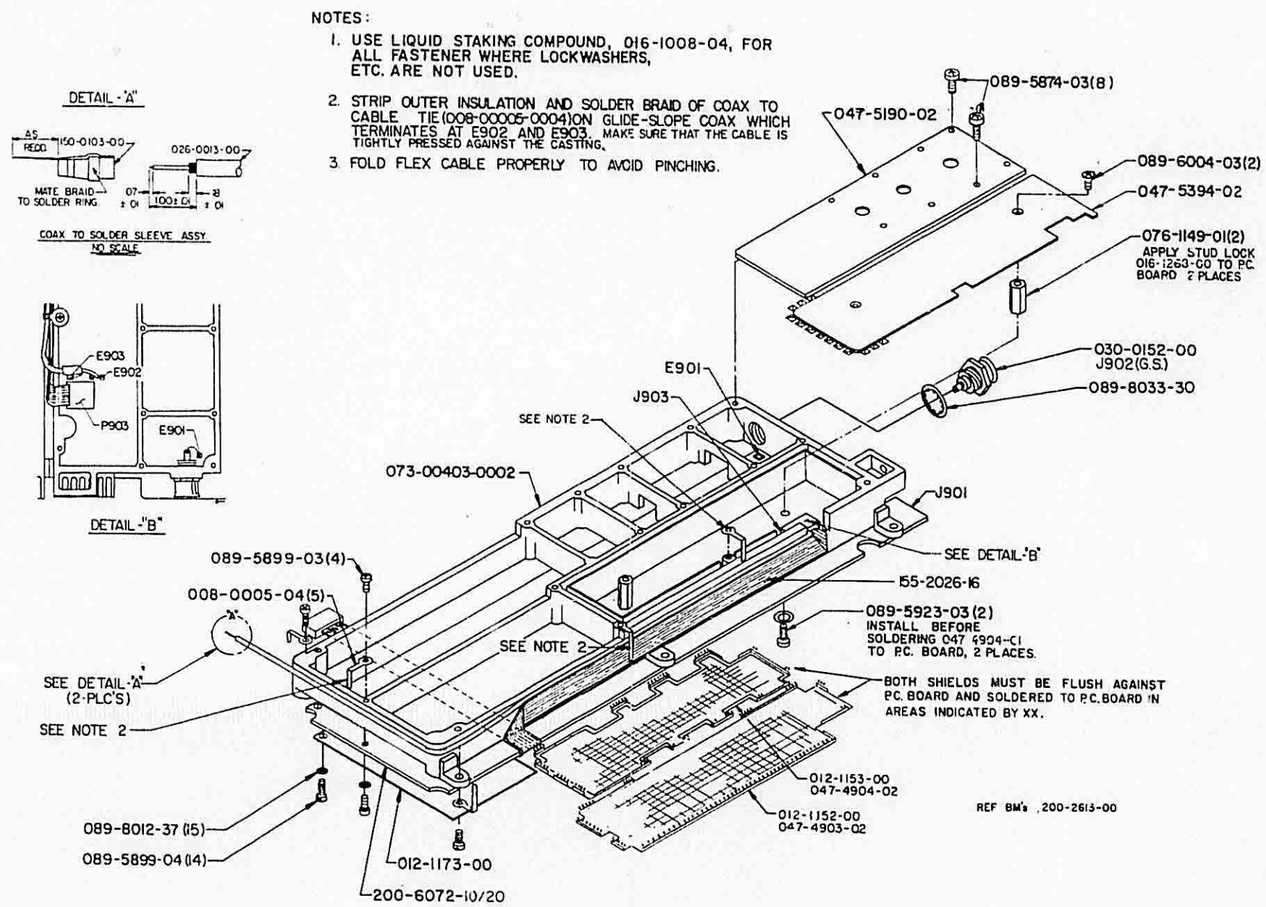

FIGURE 6-6F Glideslope Assembly
(Dwg. No. 300-02613-0000, Rev. 21, sheet 1 of 1)

NOTES:

1. USE LIQUID STAKING COMPOUND, 016-1008-04, FOR ALL FASTENER WHERE LOCKWASHERS, ETC. ARE NOT USED.
2. STRIP OUTER INSULATION AND SOLDER BRAID OF COAX TO CABLE. TIE (008-0005-04) ON GLIDE-SLOPE COAX WHICH TERMINATES AT E902 AND E903.
3. FOLD FLEX CABLE PROPERLY TO AVOID PINCHING.

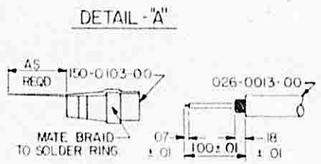

DETAIL-"B"

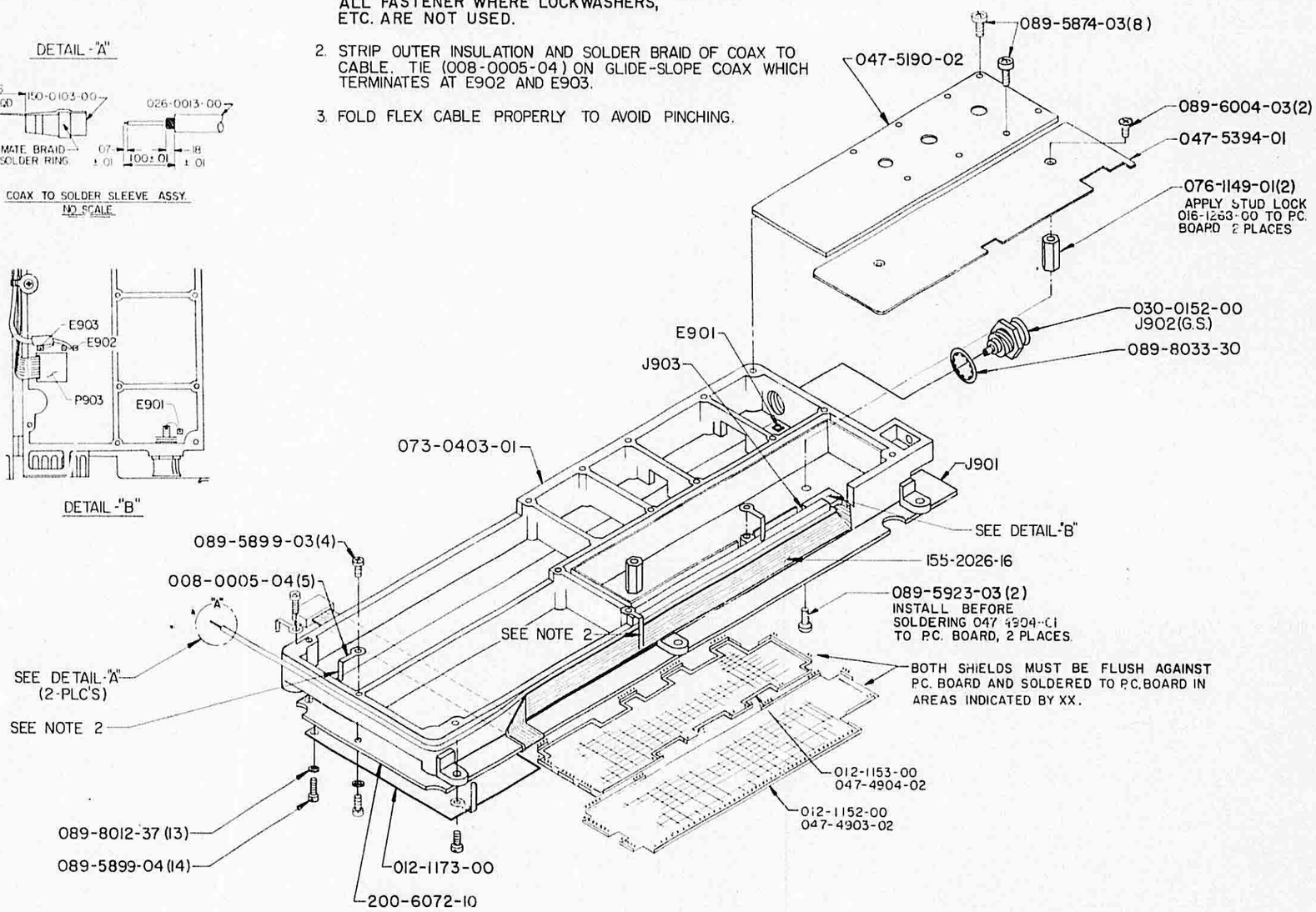

FIGURE 6-6E GLIDESLOPE ASSEMBLY
(Dwg. No. 300-02613-0000, R-16)

NOTES:

1. USE LIQUID STAKING COMPOUND, 016-1008-04, FOR ALL FASTENER WHERE LOCKWASHERS, ETC. ARE NOT USED.
2. STRIP OUTER INSULATION AND SOLDER BRAID OF COAX TO CABLE. TIE (008-0005-04) ON GLIDE-SLOPE COAX WHICH TERMINATES AT E902 AND E903.
3. FOLD FLEX CABLE PROPERLY TO AVOID PINCHING.

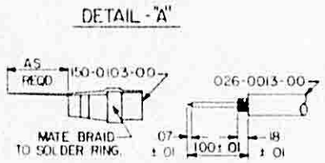

DETAIL-"B"

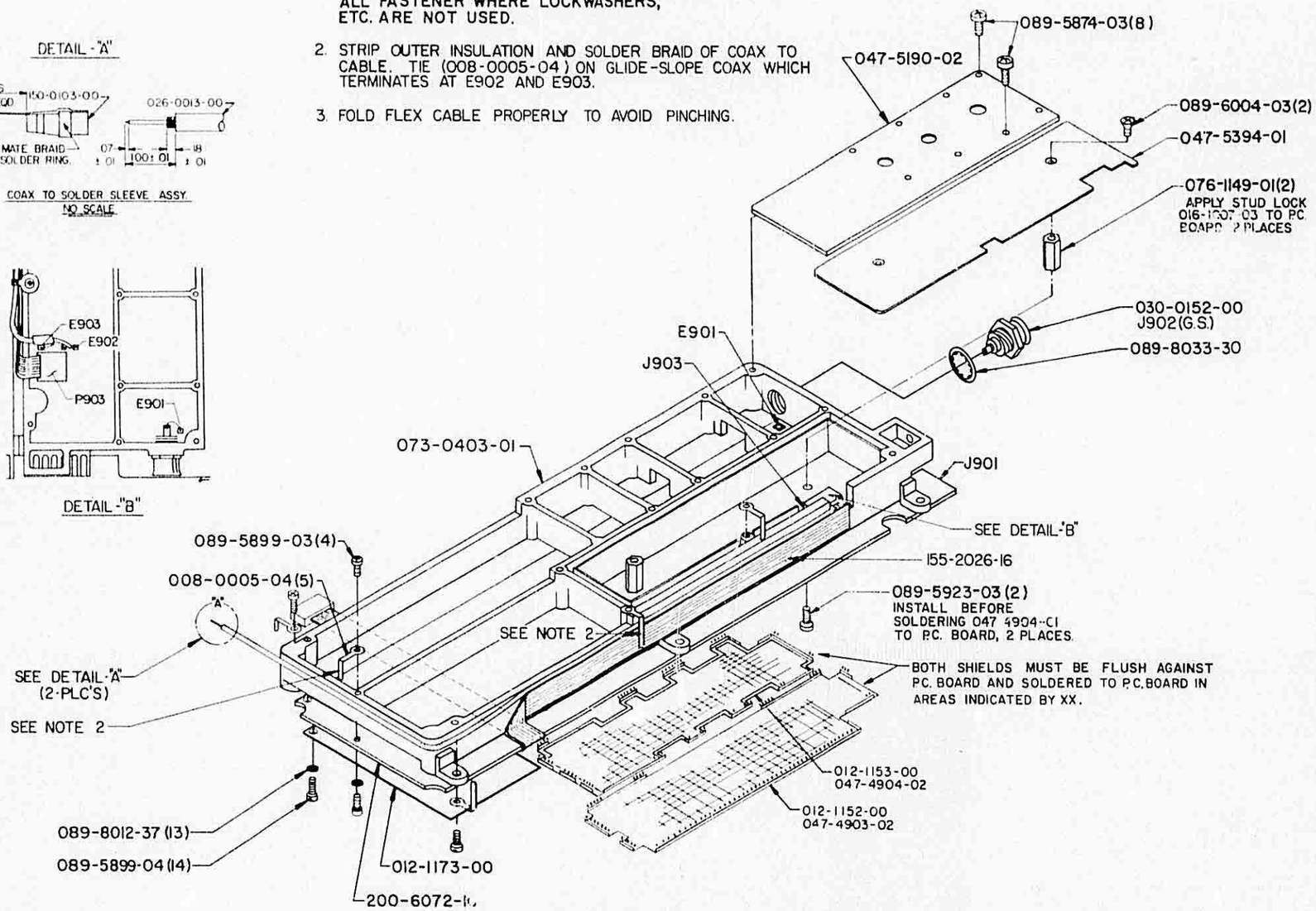

FIGURE 6-6D GLIDESLOPE ASSEMBLY
(Dwg. No. 300-02613-0000, R-14)

NOTES:

1. USE LIQUID STAKING COMPOUND, 016-1008-04, FOR ALL FASTENER WHERE LOCKWASHERS, ETC. ARE NOT USED.
2. STRIP OUTER INSULATION AND SOLDER BRAID OF COAX TO CABLE. TIE (008-0005-04) ON GLIDE-SLOPE COAX WHICH TERMINATES AT E902 AND E903.
3. FOLD FLEX CABLE PROPERLY TO AVOID PINCHING.

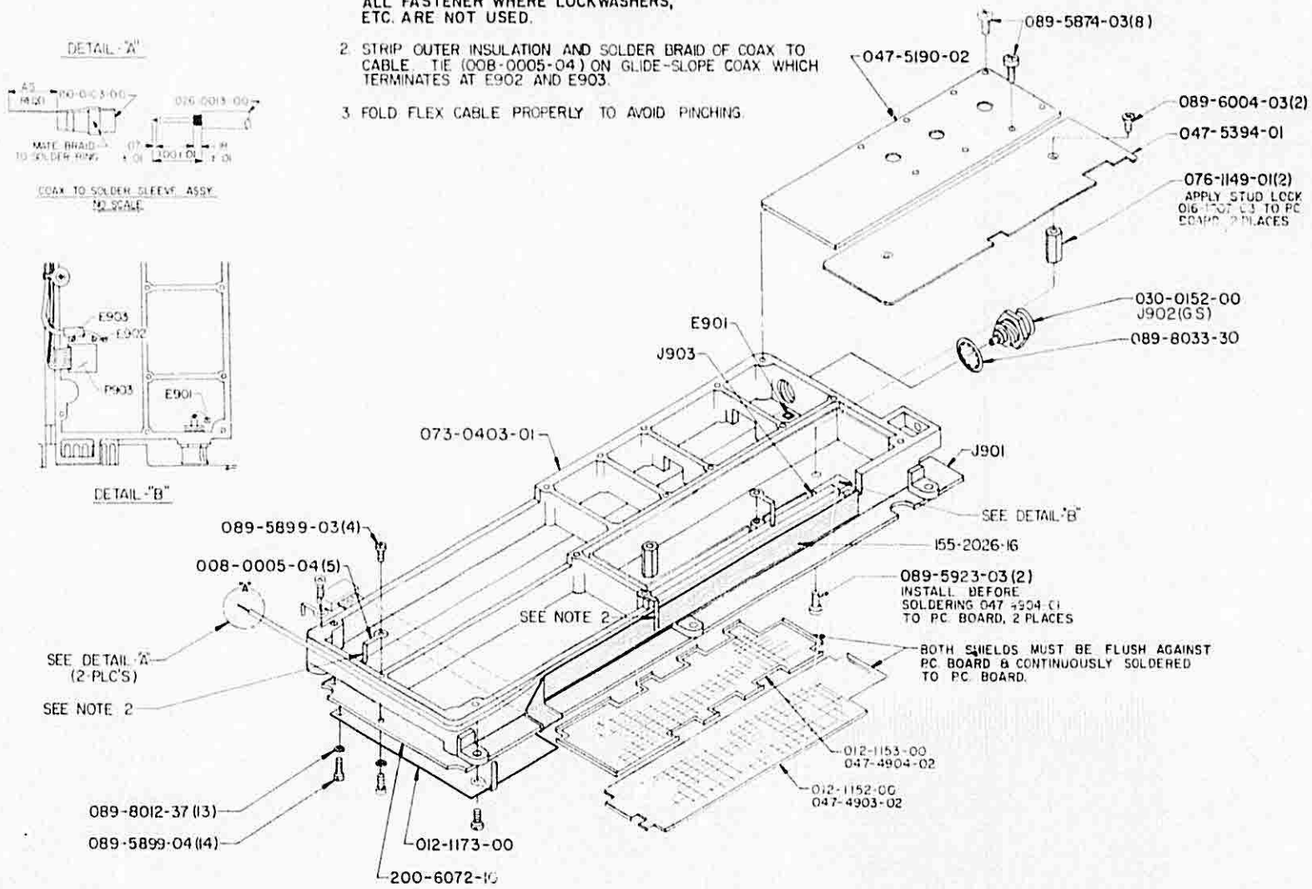

FIGURE 6-6C GLIDESLOPE ASSEMBLY
(Dwg. No. 300-02613-0000, R-13)

NOTES
1. USE LIQUID STAKING COMPOUND, 016-1008-04, FOR ALL FASTENER WHERE LOCKWASHERS, ETC. ARE NOT USED.

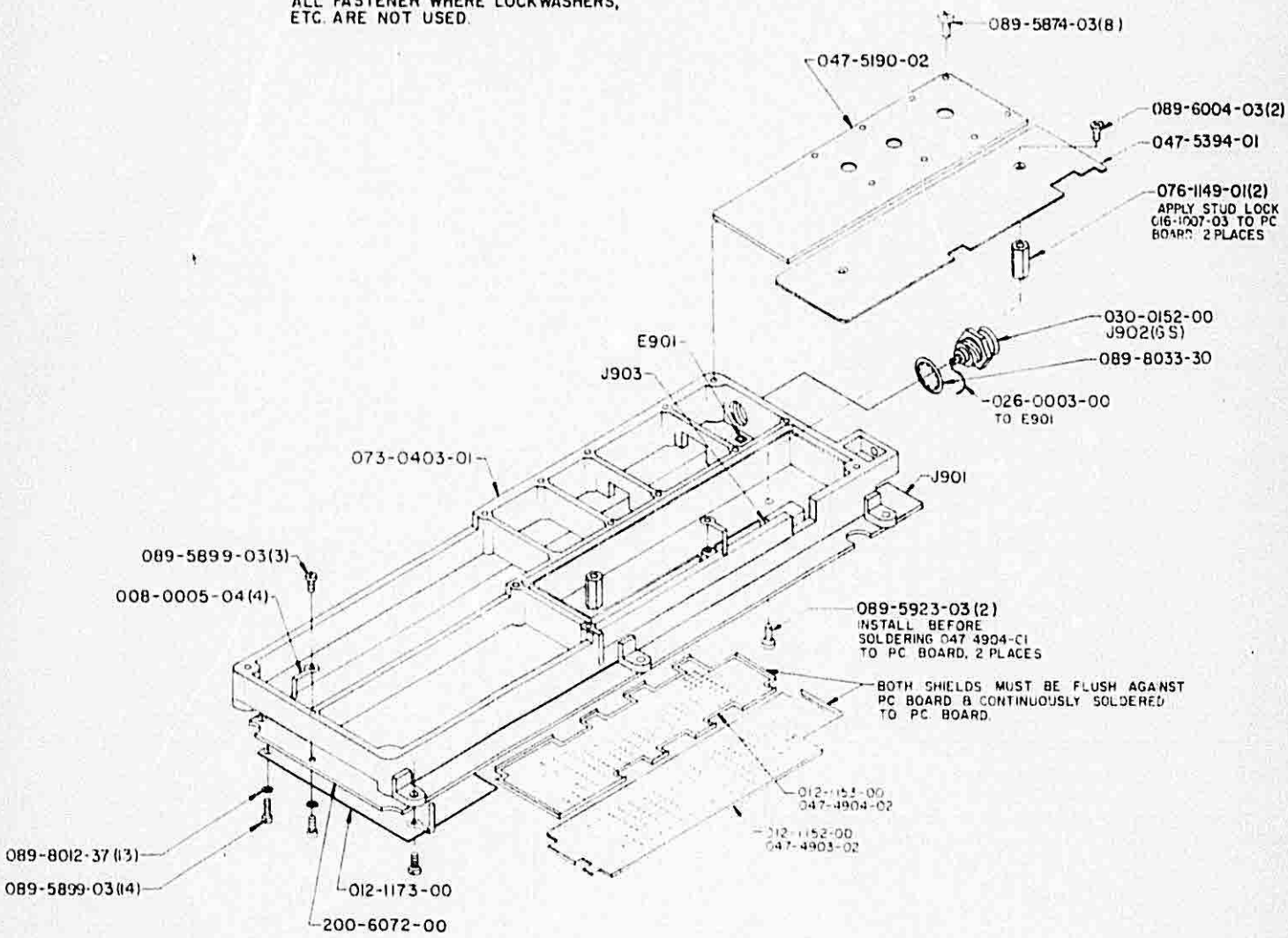

FIGURE 6-6B GLIDESLOPE ASSEMBLY
(Dwg. No. 300-02613-0000, R-8)

NOTES:

1. USE LIQUID STAKING COMPOUND, 016-1008-04, FOR ALL FASTENER WHERE LOCKWASHERS, ETC. ARE NOT USED.

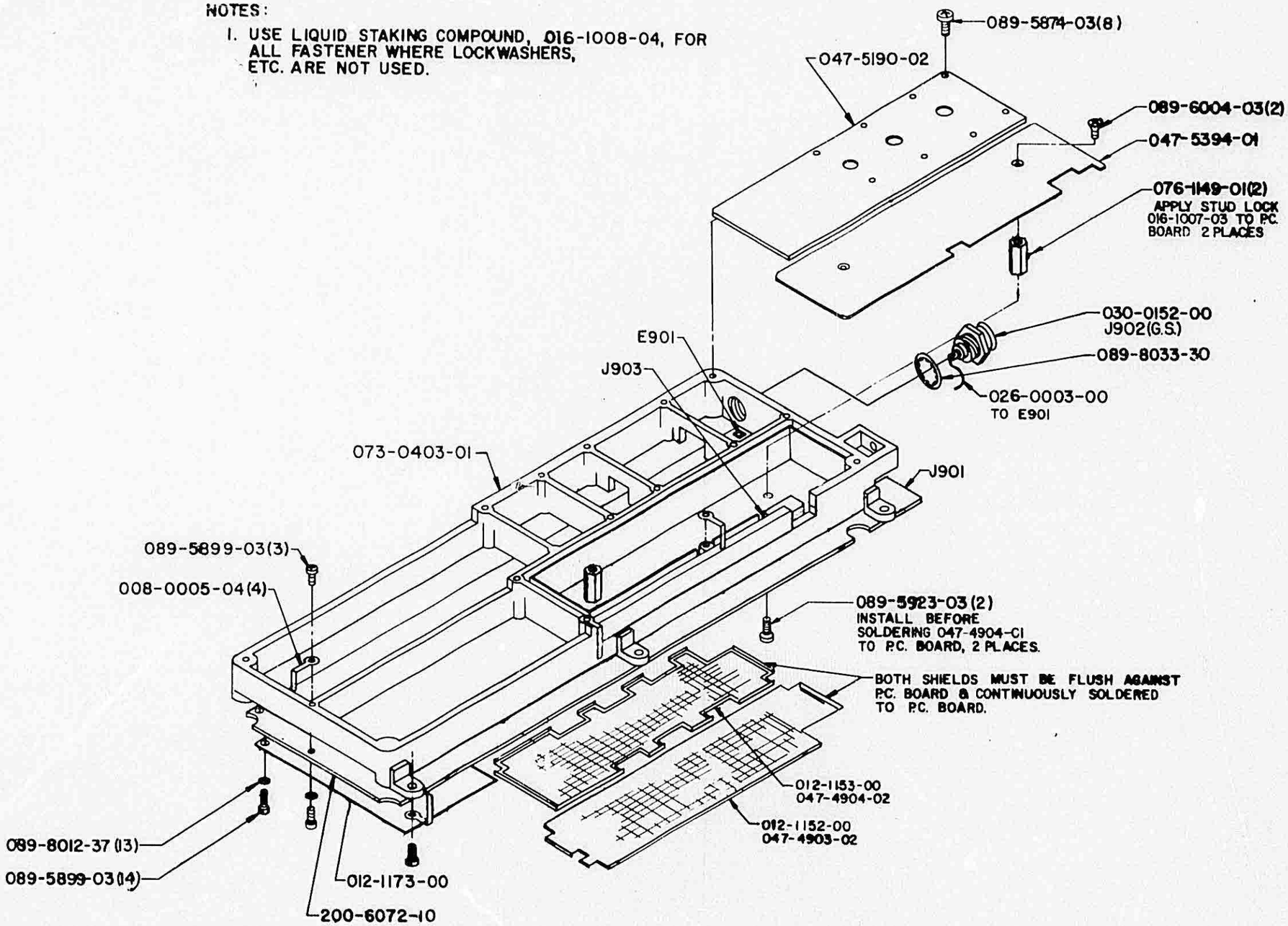

FIGURE 6-6A GLIDESLOPE ASSEMBLY
(Dwg. No. 300-02613-0000, R-7)

NOTES:

1. USE LIQUID STAKING COMPOUND, 016-1008-04, FOR ALL FASTENER WHERE LOCKWASHERS, ETC. ARE NOT USED.

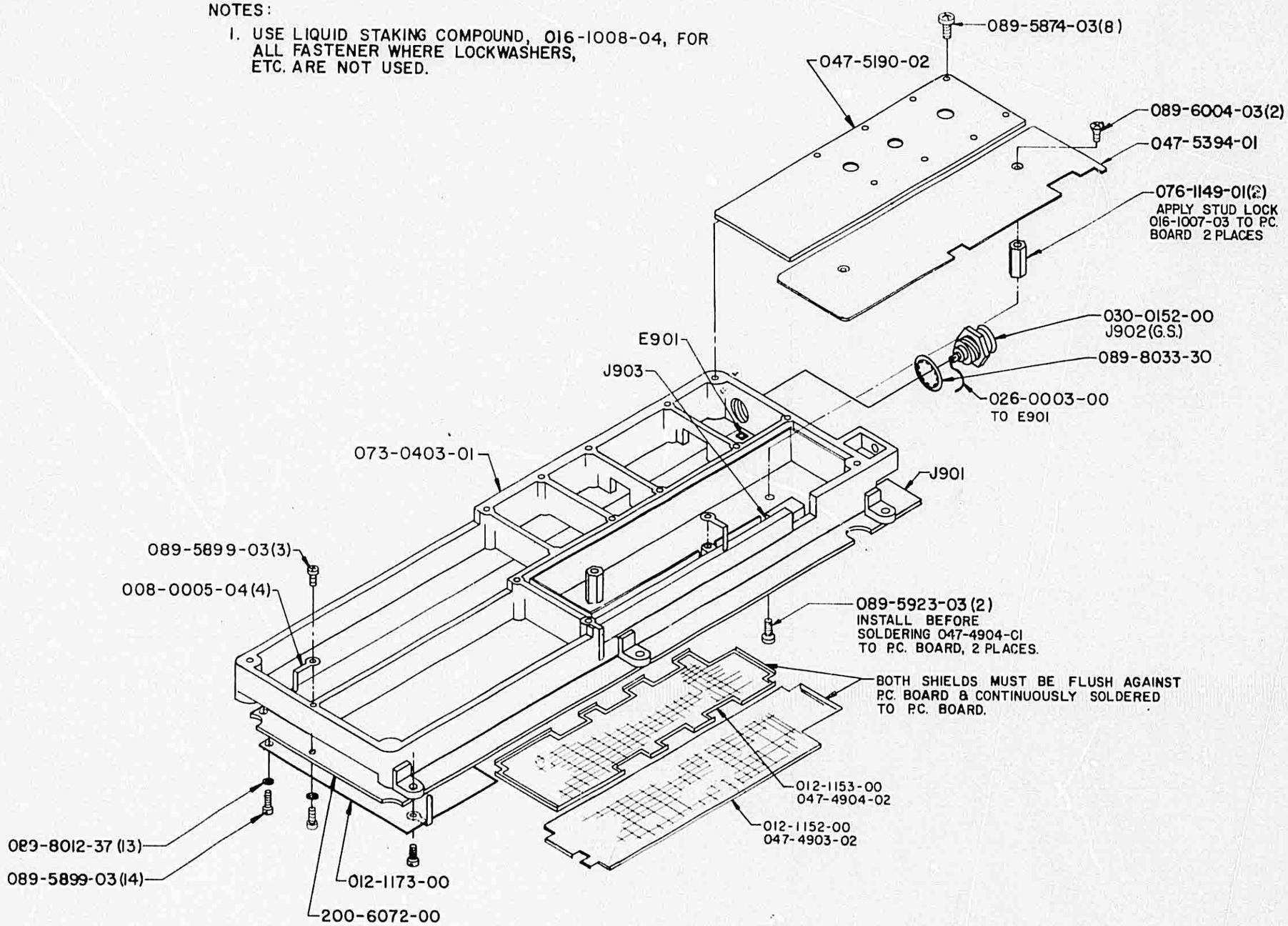

FIGURE 6-6 GLIDESLOPE ASSEMBLY
(Dwg. No. 300-02613-0000, R-6)

200-02641-0000	R/T ASSY 14V	Rev 22
200-02641-0001	R/T ASSY 14V 50KHZ	Rev 22
200-02641-0002	R-T ASSY 28V	Rev 26
200-02641-0003	R-T ASSY 28V 50KHZ	Rev 27
200-02641-0099	COMMON BOM	Rev 20

SYMBOL	CAS PART NBR	DESCRIPTION	[UOM]	-0000	-0001	-0002	-0003	-0099
-	008-00005-0004	TND COP LUG	[EA]	.	.	.	.	2
-	008-00022-0000	SOLDER LUG	[EA]	.	.	.	.	1
-	008-00040-0000	SLDR LUG	[EA]	.	.	.	.	1
-	008-00045-0001	TERM	[EA]	.	.	.	.	1
-	008-00107-0000	TRML GND	[EA]	.	.	.	.	1
-	010-00019-0090	TERM STDF WHT	[EA]	.	.	.	.	4
-	010-00028-0090	TERM TEF WHT	[EA]	.	.	.	.	4
-	010-00040-0001	TERM STDF .12	[EA]	.	.	.	.	1
-	012-01005-0002	TAPE MYLAR .500 W	[IN]	.	.	.	.	0.59
-	012-01021-0006	TAPE ELEC 3/8 WD	[AR]	.	.	1	1	.
-	012-01480-0000	INSUL SHIELD	[EA]	.	.	.	.	1
-	016-01004-0000	COMPOUND THRML JNT	[AR]	.	.	.	.	0
-	016-01008-0004	GLYPTAL 7526 BL	[AR]	.	.	.	.	0
-	025-00004-0006	WIRE 20 BLU	[IN]	.	.	.	.	1
-	025-00004-0007	WIRE 20 VIO	[IN]	.	.	.	.	1.8
-	025-00005-0001	WIRE 18 BRN	[IN]	.	.	.	.	5.1
-	025-00005-0009	WIRE 18 WHT	[IN]	4.2	4.2	.	.	.
-	025-00018-0099	WIRE 26 WHT	[IN]	.	.	.	.	1.8
-	026-00003-0000	WIRE CU 22AWG TINNE	[IN]	.	.	.	.	2.1
-	047-04871-0000	TRANSFORMER CLIP	[EA]	.	.	.	.	1
-	047-04920-0001	CAP CLAMP PLT W/F	[EA]	.	.	.	.	1
-	047-04972-0001	CVR XMTR	[EA]	.	.	.	.	1
-	047-05510-0001	XMTR CAN W/F CMPLT	[EA]	.	.	.	.	1
-	047-08783-0001	COVER CLIP	[EA]	.	.	.	.	1
-	073-00405-0002	RCVR/SMTR CSTG	[EA]	.	.	.	.	1
-	076-00159-0000	SPACER INSUL	[EA]	.	.	.	.	2
-	076-01064-0000	SPACER	[EA]	.	.	.	.	1
-	089-02009-0037	NUT FLAT 4-40	[EA]	.	.	.	.	1
-	089-05523-0004	SCR FLHP 4-40X1/4	[EA]	.	.	.	.	4
-	089-05874-0003	SCR PHP 2-56X3/16	[EA]	.	.	.	.	2
-	089-05874-0004	SCR PHP 2-56X1/4	[EA]	.	.	.	.	2
-	089-05878-0004	SCR PHP 4-40X1/4	[EA]	.	.	.	.	8
-	089-05878-0009	SCR PHP 4-40X9/16	[EA]	.	.	.	.	1
-	089-05899-0003	SCR FHP 2-56X3/16	[EA]	.	.	.	.	13
-	089-05899-0011	SCR PHP 2-56X11/16	[EA]	.	.	.	.	1
-	089-05903-0004	SCR PHP 4-40X1/4	[EA]	.	.	.	.	2

SYMBOL	CAS PART NBR	DESCRIPTION	[UOM]	-0000	-0001	-0002	-0003	-0099
-	089-06004-0003	SCR FHP 2-56X3/16	[EA]	.	.	.	.	19
-	089-08023-0030	WSHR FLT STD #2	[EA]	.	.	.	.	3
-	089-08025-0030	WSHR FLT STD #4	[EA]	.	.	.	.	1
-	089-08033-0030	WSHR INTL LK .391	[EA]	.	.	.	.	2
-	089-08107-0034	WSHR SPLT LK #2	[EA]	.	.	.	.	2
-	089-08109-0034	WSHR SPLT LK #4	[EA]	.	.	.	.	5
-	090-00054-0003	SPACER	[EA]	.	.	.	.	1
-	090-00133-0001	HEATSINK .323 LG	[EA]	.	.	.	.	1
-	091-00016-0005	EXT FIBRE WASHER	[EA]	.	.	.	.	1
-	091-00028-0003	SCR BHS 4-40X.250	[EA]	.	.	.	.	1
-	091-00155-0000	WASHER MICA	[EA]	.	.	.	.	1
-	091-00156-0000	BUSHING	[EA]	.	.	.	.	2
-	091-00283-0002	TO-3 INSULATOR	[EA]	.	.	.	.	1
-	091-00286-0002	INSUL XSTR .687	[EA]	.	.	.	.	1
-	150-00004-0010	TUBING TFLN 22AWG	[IN]	.	.	.	.	2.4
-	150-00005-0010	TUBING TFLN 20AWG	[IN]	.	.	.	.	1.8
-	150-00025-0010	TUBING SHRINK 3G	[IN]	.	.	.	.	2.4
-	200-02641-0099	COMMON BOM	[EA]	1	1	1	1	.
-	200-06070-0020	ICAO RCVR 28V	[EA]	.	.	1	.	.
-	200-06070-0021	ICAO RCVR 28V	[EA]	.	.	.	1	.
-	200-06073-0010	TRANSMITTER 28V	[EA]	.	.	1	1	.
-	200-06073-0011	TRANSMITTER 14V	[EA]	1	1	.	.	.
-	200-06332-0020	KX165 DESIGN UPGRA	[EA]	1	.	.	.	.
-	200-06332-0021	ICAO RCVR 14V	[EA]	.	1	.	.	.
C 1100	111-00001-0013	CAP CR .1UF 50V	[EA]	.	.	.	.	1
C 1101	111-00001-0013	CAP CR .1UF 50V	[EA]	.	.	.	.	1
C 1102	111-00001-0010	CAP CR .0039UF 50V	[EA]	.	.	.	.	1
C 1103	097-00104-0070	CAP AL 470UF 50V	[EA]	.	.	1	1	.
C 1103	097-00104-0076	CAP AL 1KUF 25V	[EA]	1	1	.	.	.
C 1104	097-00104-0070	CAP AL 470UF 50V	[EA]	.	.	1	1	.
C 1104	097-00104-0076	CAP AL 1KUF 25V	[EA]	1	1	.	.	.
C 1105	097-00104-0070	CAP AL 470UF 50V	[EA]	.	.	1	1	.
C 1105	097-00104-0076	CAP AL 1KUF 25V	[EA]	1	1	.	.	.
C 1106	097-00104-0070	CAP AL 470UF 50V	[EA]	.	.	1	1	.
C 1106	097-00104-0076	CAP AL 1KUF 25V	[EA]	1	1	.	.	.
C 1107	113-03121-0000	CAP DC 120PF 500V	[EA]	.	.	1	1	.
C 1108	113-03121-0000	CAP DC 120PF 500V	[EA]	.	.	1	1	.
CR 1100	007-05039-0002	DIO Z 40.2V	[EA]	.	.	.	.	1
J 301	030-00152-0000	CONN BNC HEX	[EA]	.	.	.	.	1
J 801	030-00152-0000	CONN BNC HEX	[EA]	.	.	.	.	1
L 1100	019-02209-0001	CHOKE FILTER	[EA]	.	.	.	.	1
L 1101	019-02279-0000	CHOKE 500UH	[EA]	.	.	.	.	1

SYMBOL	CAS PART NBR	DESCRIPTION	[UOM]	-0000	-0001	-0002	-0003	-0099
Q 312	007-00525-0000	XSTR PWR MJE15028	[EA]	1	1	.	.	.
Q 312	007-00930-0000	XSTR S PNPMJE15029	[EA]	.	.	1	1	.
Q 313	007-00168-0000	XSTR PNP 2N4398	[EA]	1	1	.	.	.
Q 313	007-00964-0000	XSTR MJ11028 NPN	[EA]	.	.	1	1	.
RT 110	134-01027-0000	POSISTOR BE	[EA]	.	.	.	.	1

NOTES:
1. USE THERMAL COMPOUND, 016-1004-00, ON TRANSISTORS Q802, Q803, Q804, TO CASTING MTGS.
2. USE LIQUID STAKING COMPOUND, 016-1008-04, WHERE LOCKWASHERS, ETC., ARE NOT USED.
3. THOSE SCREW MNTG. Q803, Q804, AND P.C. BD. ASSEMBLY 200-6073-00/01 SHALL BE TORQUED TO 72 OUNCE INCHES.
4. USE THERMAL COMPOUND, 016-1004-00 ON BOTH SIDES OF INSULATOR, 091-0283-02 FOR Q313.

REWORK NOTES:

A. ADD CR1100, ANODE TIED TO E212, CATHODE TIED TO E203.

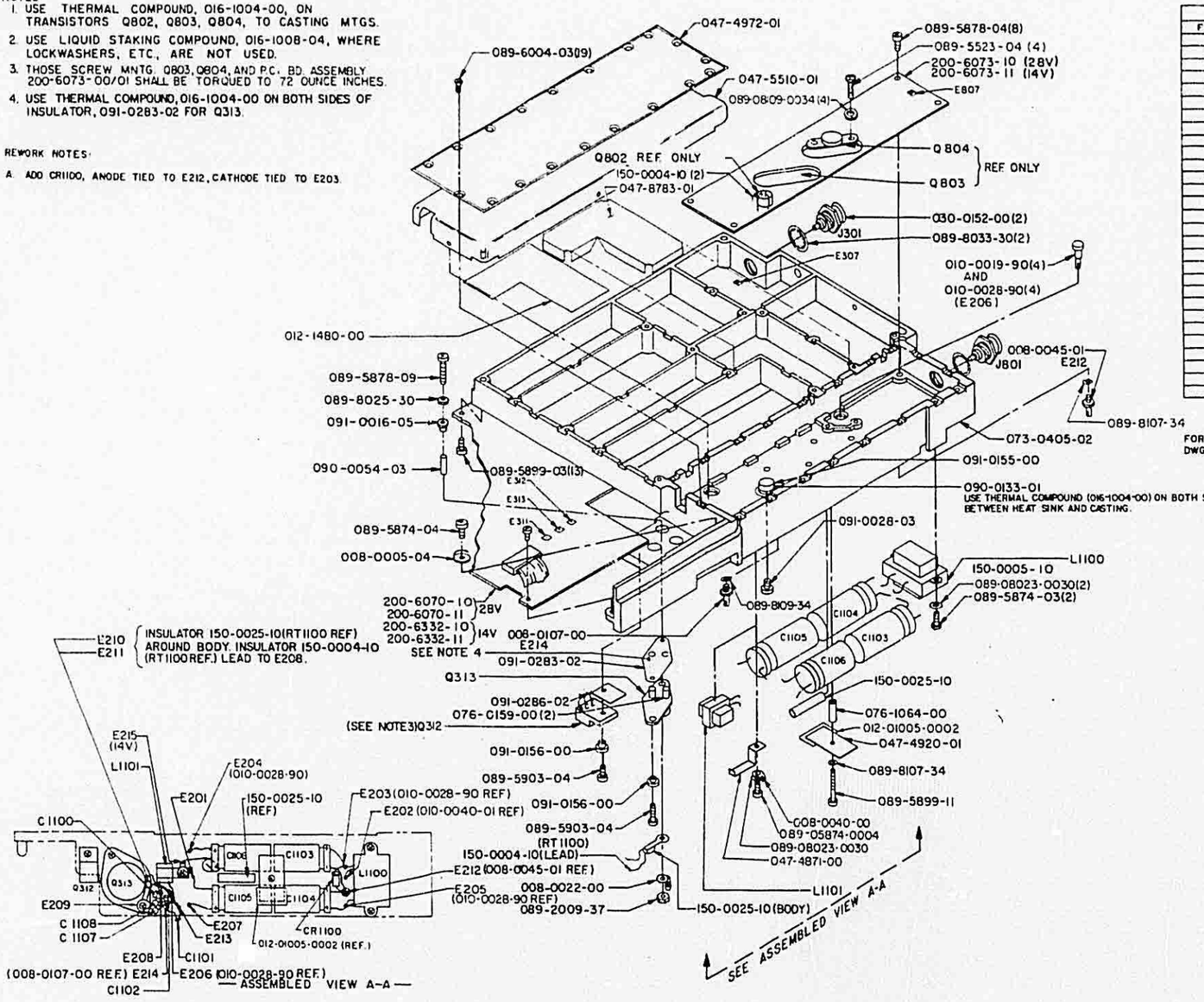

14 & 28V WIRING SCHEDULE					
FROM	TO	DESCRIPTION	KPN	FEET	VOLTS
E205	E203	26" WHT	025-0018-99	.15	14,28
E208	E207	20" BLU	025-0004-06	.08	14,28
E207	E204	20" VIO	025-0004-07	.15	28
E206	E205	18" BRN	025-0005-01	.42	14,28
E203	E204	18" WHT	025-0005-09	.35	14
E211	E208	RT1100 LEAD		.22	14,28
E210	E213	RT1100 LEAD		.22	14,28
J301	E307	22" BUSS	026-0003-00	.08	14,28
J801	E807	22" BUSS	026-0003-00	.08	14,28

FOR WIRES THAT DO NOT TERMINATE ON THIS ASSY, REF. DWG 300-2486-00/01, PRACTICAL WIRING DIAGRAM.

FIGURE 6-7D Receiver/Transmitter Assembly
(Dwg. No. 300-02641-0000, Rev. 33, sheet 1 of 2)

NOTES:
1. USE THERMAL COMPOUND, 016-1004-00, ON TRANSISTORS Q802, Q803, Q804, TO CASTING MTGS.
2. USE LIQUID STAKING COMPOUND, 016-1008-04, WHERE LOCKWASHERS, ETC. ARE NOT USED.
3. THOSE SCREW MNTG. Q803, Q804, AND P.C. BD. ASSEMBLY 200-6073-00/01 SHALL BE TORQUED TO 72 OUNCE INCHES.
4. USE THERMAL COMPOUND, 016-1004-00 ON BOTH SIDES OF INSULATOR, 091-0283-02 FOR Q313.

REWORK NOTES:
A. ADD CR1100, ANODE TIED TO E212, CATHODE TIED TO E203.

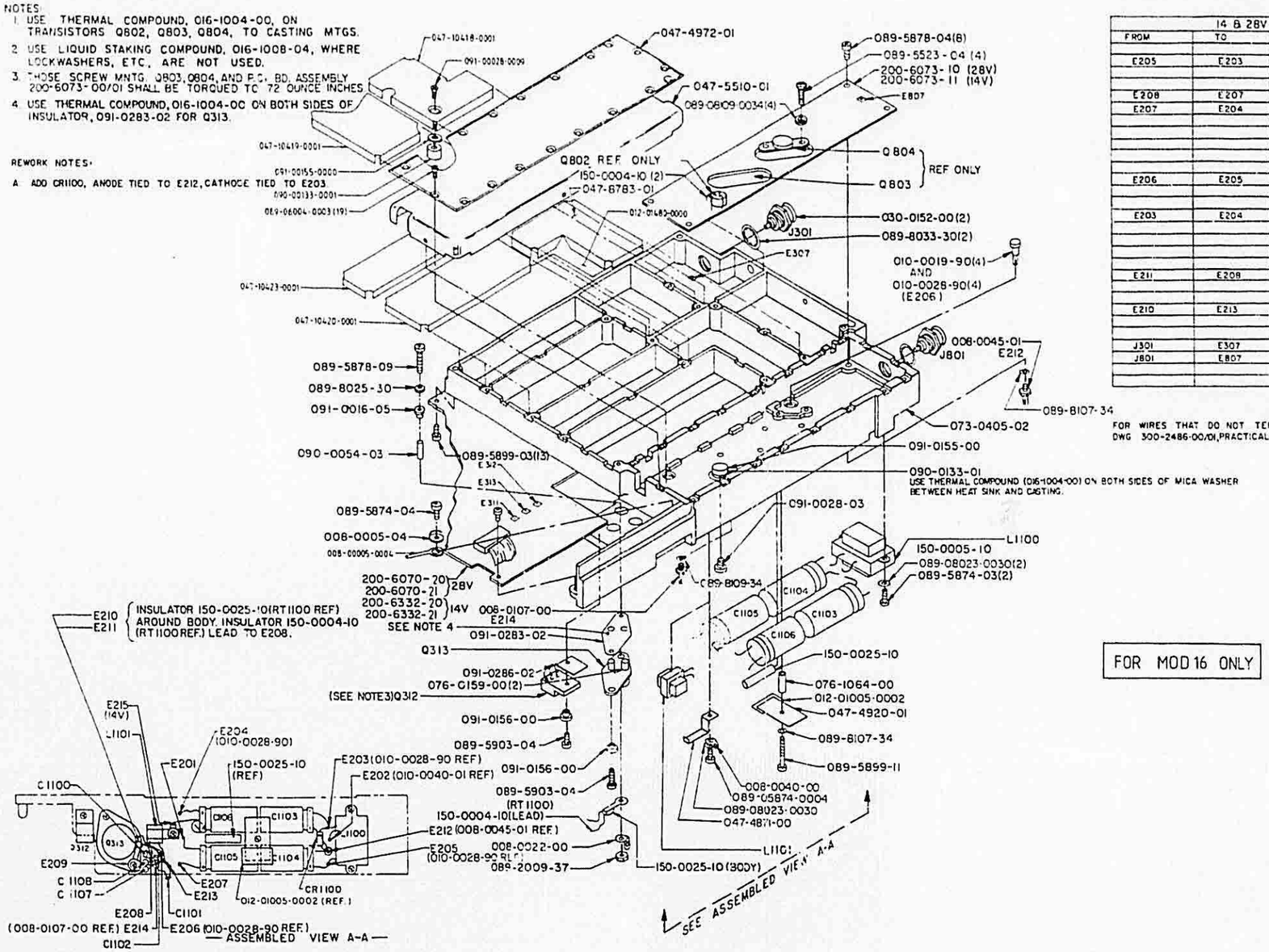

14 & 28V WIRING SCHEDULE					
FROM	TO	DESCRIPTION	KPN		VOLTS
E205	E203	26" WHT	025-0018-99	15	14,28
E208	E207	20" BLU	025-[illegible]-06	08	14,28
E207	E204	20" VIO	02[illegible]-07	15	28
E206	E205	18" BRN	025-[illegible]		
E203	E204	18" WHT	025-0005-09		
E211	E208	RT1100 LEAD		22	[illegible]
E210	E213	RT1100 LEAD		22	14,28
J301	E307	22" BUSS	026-0003-00	08	14,28
J801	E807	22" BUSS	026-0003-00	08	14,28

FOR WIRES THAT DO NOT TERMINATE ON THIS ASSY, REF DWG 300-2486-00/01, PRACTICAL WIRING DIAGRAM.

FOR MOD 16 ONLY

FIGURE 6-7D Receiver/Transmitter Assembly
(Dwg. No. 300-02641-0000, Rev. 33, sheet 2 of 2)

NOTES:
1. USE THERMAL COMPOUND, 016-1004-00, ON TRANSISTORS Q802, Q803, Q804, TO CASTING MTGS.
2. USE LIQUID STAKING COMPOUND, 016-1008-04, WHERE LOCKWASHERS, ETC., ARE NOT USED.
3. THOSE SCREW MNTG. Q803, Q804, AND P.C. BD. ASSEMBLY 200-6073-00/01 SHALL BE TORQUED TO 72 OUNCE INCHES.
4. USE THERMAL COMPOUND, 016-1004-00 ON BOTH SIDES OF INSULATOR, 091-0283-02 FOR Q313.

REWORK NOTES:

A. ADD CR1100, ANODE TIED TO E212, CATHODE TIED TO E203.

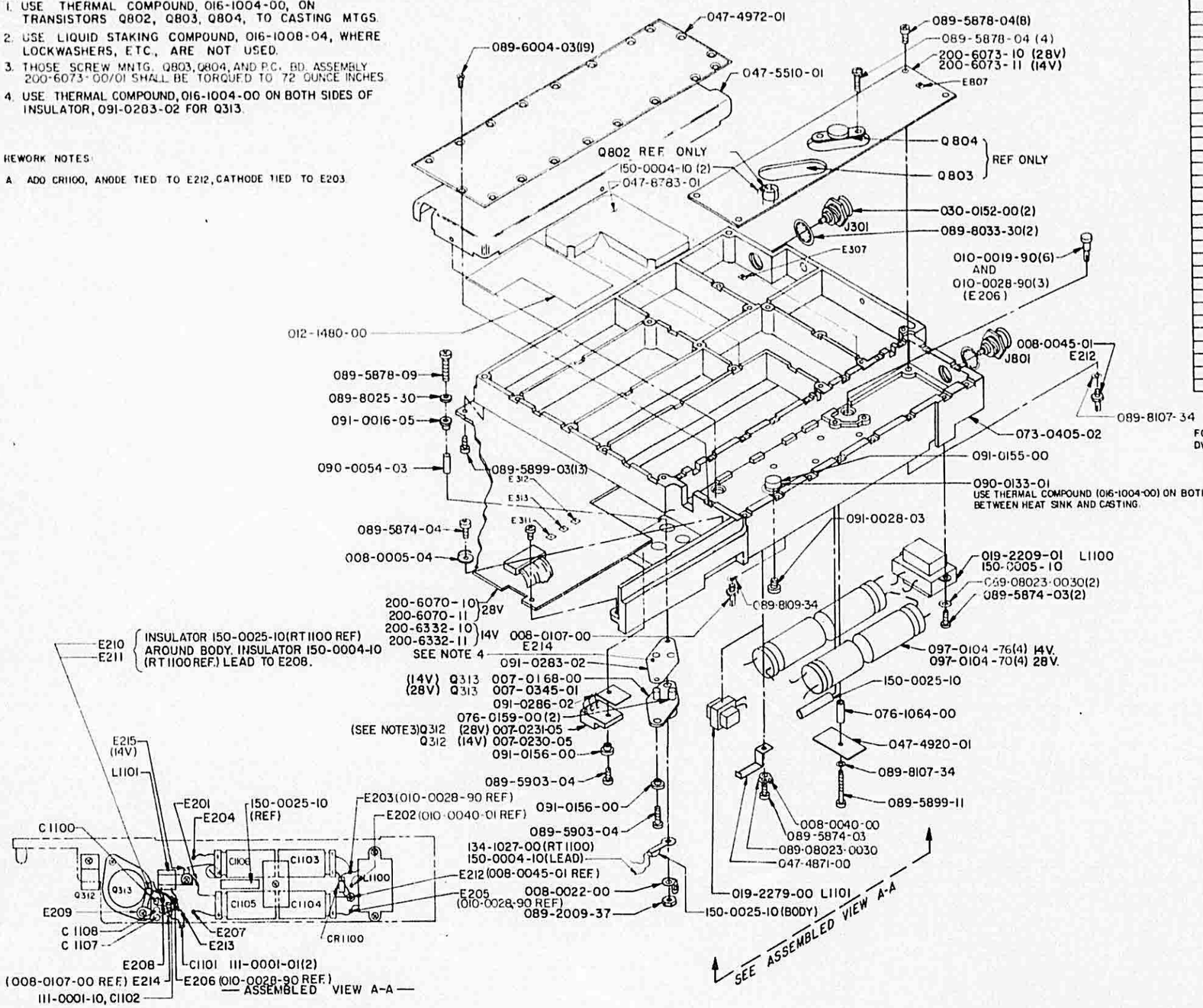

14 & 28V WIRING SCHEDULE					
FROM	TO	DESCRIPTION	KPN	FEET	VOLTS
E205	E203	26" WHT	025-0018-99	.15	14,28
E208	E207	20" BLU	025-0004-06	.08	14,28
E207	E204	20" VIO	025-0004-07	.15	28
E206	E205	18" BRN	025-0005-01	.42	14,28
E203	E204	18" WHT	025-0005-09	.35	14
E211	E208	RT1100 LEAD		.22	14,28
E210	E213	RT1100 LEAD		.22	14,28
J301	E307	22" BUSS	026-0003-00	.08	14,28
J801	E807	22" BUSS	026-0003-00	.08	14,28

FOR WIRES THAT DO NOT TERMINATE ON THIS ASSY, REF. DWG 300-2486-00/01, PRACTICAL WIRING DIAGRAM.

FIGURE 6-7C R/T ASSEMBLY
(Dwg. No. 300-02641-0000, R-27)

NOTES:
1. USE THERMAL COMPOUND, 016-1004-00, ON TRANSISTORS Q802, Q803, Q804, TO CASTING MTGS.
2. USE LIQUID STAKING COMPOUND, 016-1008-04, WHERE LOCKWASHERS, ETC, ARE NOT USED.
3. THOSE SCREW MNTG. Q803, Q804, AND P.C. BD. ASSEMBLY 200-6073-00/01 SHALL BE TORQUED TO 72 OUNCE INCHES.
4. USE THERMAL COMPOUND, 016-1004-00 ON BOTH SIDES OF INSULATOR, 091-0283-02 FOR Q313.

REWORK NOTES:

A. ADD CR1100, ANODE TIED TO E212, CATHODE TIED TO E203.

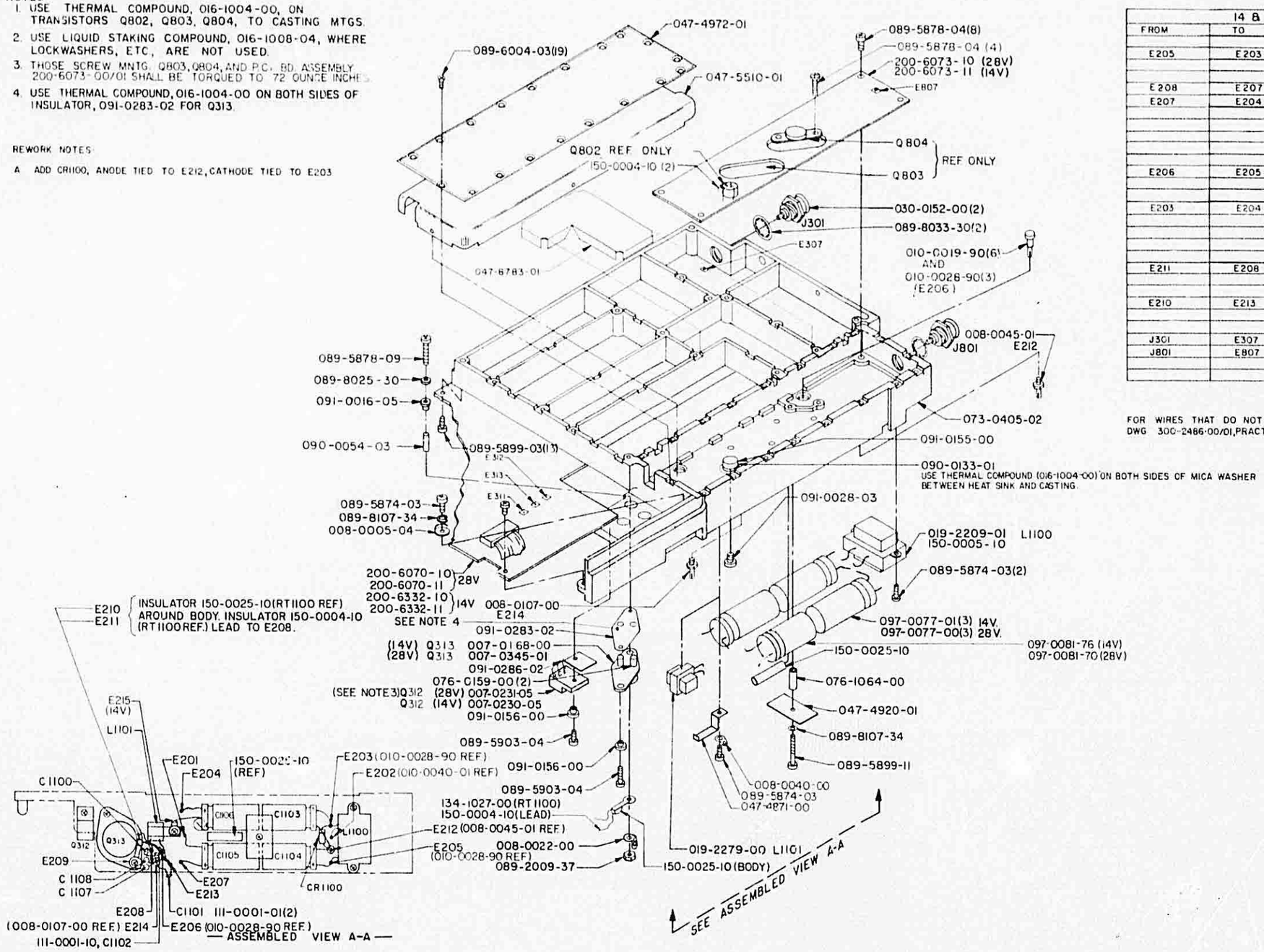

14 & 28V WIRING SCHEDULE					
FROM	TO	DESCRIPTION	KPN	FEET	VOLTS
E205	E203	26" WHT	025-0018-99	.15	14,28
E208	E207	20" BLU	025-0004-06	.08	14,28
E207	E204	20" VIO	025-0004-07	.15	28
E206	E205	18" BRN	025-0005-01	.42	14,28
E203	E204	18" WHT	025-0005-09	.35	14
E211	E208	RT1100 LEAD		.22	14,28
E210	E213	RT1100 LEAD		.22	14,28
J301	E307	22" BUSS	026-0003-00	.08	14,28
J801	E807	22" BUSS	026-0003-00	.08	14,28

FOR WIRES THAT DO NOT TERMINATE ON THIS ASSY, REF DWG 300-2486-00/01, PRACTICAL WIRING DIAGRAM.

FIGURE 6-7B R/T ASSEMBLY
(Dwg. No. 300-02641-0000, R-21)

NOTES:
1. USE THERMAL COMPOUND, 016-1004-00, ON TRANSISTORS Q802, Q803, Q804, TO CASTING MTGS.
2. USE LIQUID STAKING COMPOUND, 016-1008-04, WHERE LOCKWASHERS, ETC., ARE NOT USED.
3. THOSE SCREW MNTG. Q803, Q804, AND P.C. BD. ASSEMBLY 200-6073-00/01 SHALL BE TORQUED TO 72 OUNCE INCHES.
4. USE THERMAL COMPOUND, 016-1004-00 ON BOTH SIDES OF INSULATOR, 091-0283-02 FOR Q313.

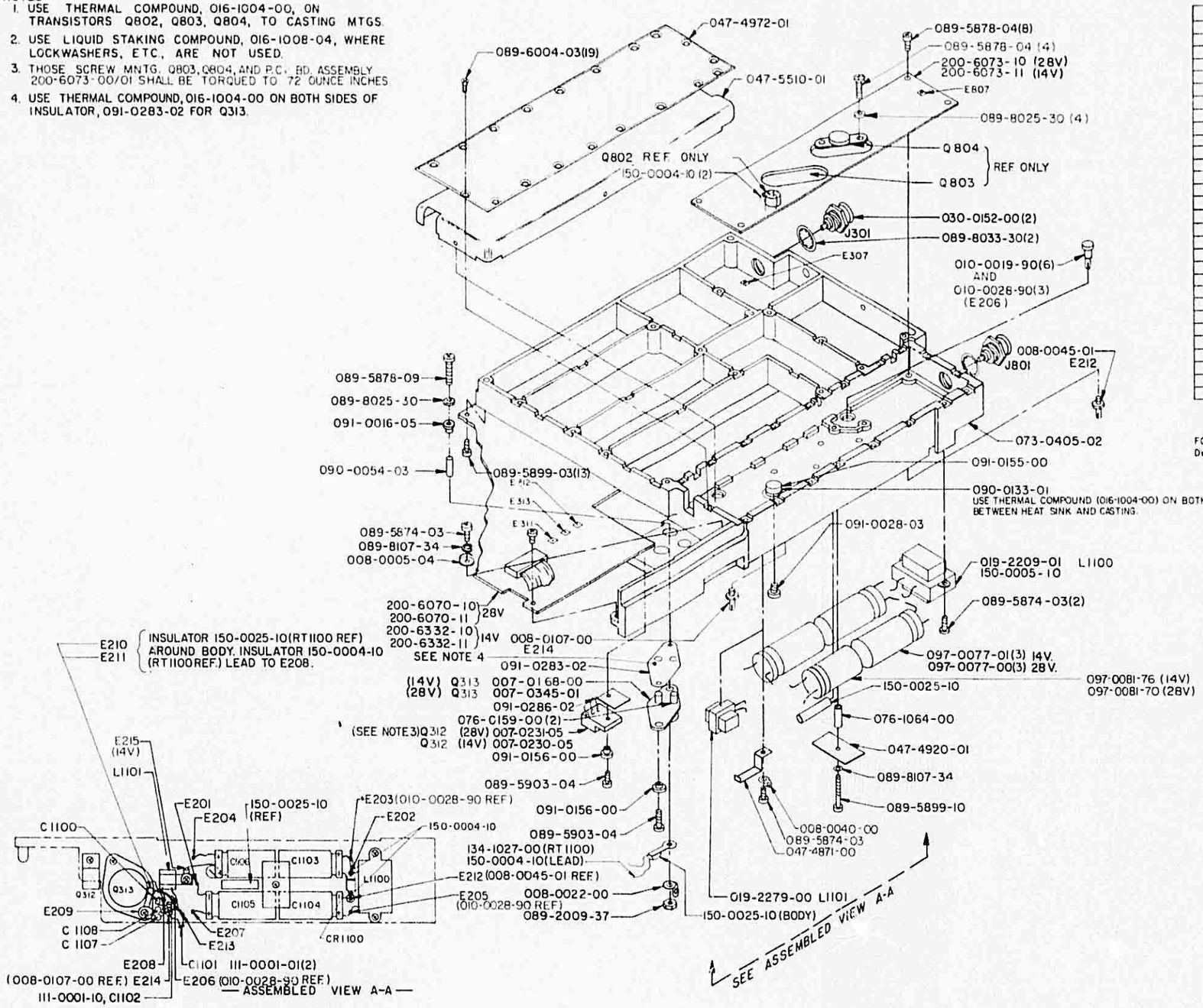

14 & 28V WIRING SCHEDULE					
FROM	TO	DESCRIPTION	KPN	FEET	VOLTS
E205	E203	26" WHT	025-0018-99	.15	14,28
E208	E207	20" BLU	025-0004-06	.08	14,28
E207	E204	20" VIO	025-0004-07	.15	28
E206	E205	18" BRN	025-0005-01	.42	14,28
E203	E204	18" WHT	025-0005-09	.35	14
E211	E208	RT1100 LEAD		.22	14,28
E210	E213	RT1100 LEAD		.22	14,28
J301	E307	22" BUSS	026-0003-00	.08	14,28
J801	E807	22" BUSS	026-0003-00	.08	14,28

FOR WIRES THAT DO NOT TERMINATE ON THIS ASSY, REF. DWG 300-2486-00/01, PRACTICAL WIRING DIAGRAM.

FIGURE 6-7A R/T ASSEMBLY
(Dwg. No. 300-02641-0000, R-15)

NOTES:
1. USE THERMAL COMPOUND, 016-1004-00, ON TRANSISTORS Q802, Q803, Q804, TO CASTING MTGS.
2. USE LIQUID STAKING COMPOUND, 016-1008-04, WHERE LOCKWASHERS, ETC., ARE NOT USED.
3. THOSE SCREW MNTG. Q803, Q804, AND P.C. BD. ASSEMBLY 200-6073-00/01 SHALL BE TORQUED TO 72 OUNCE INCHES.

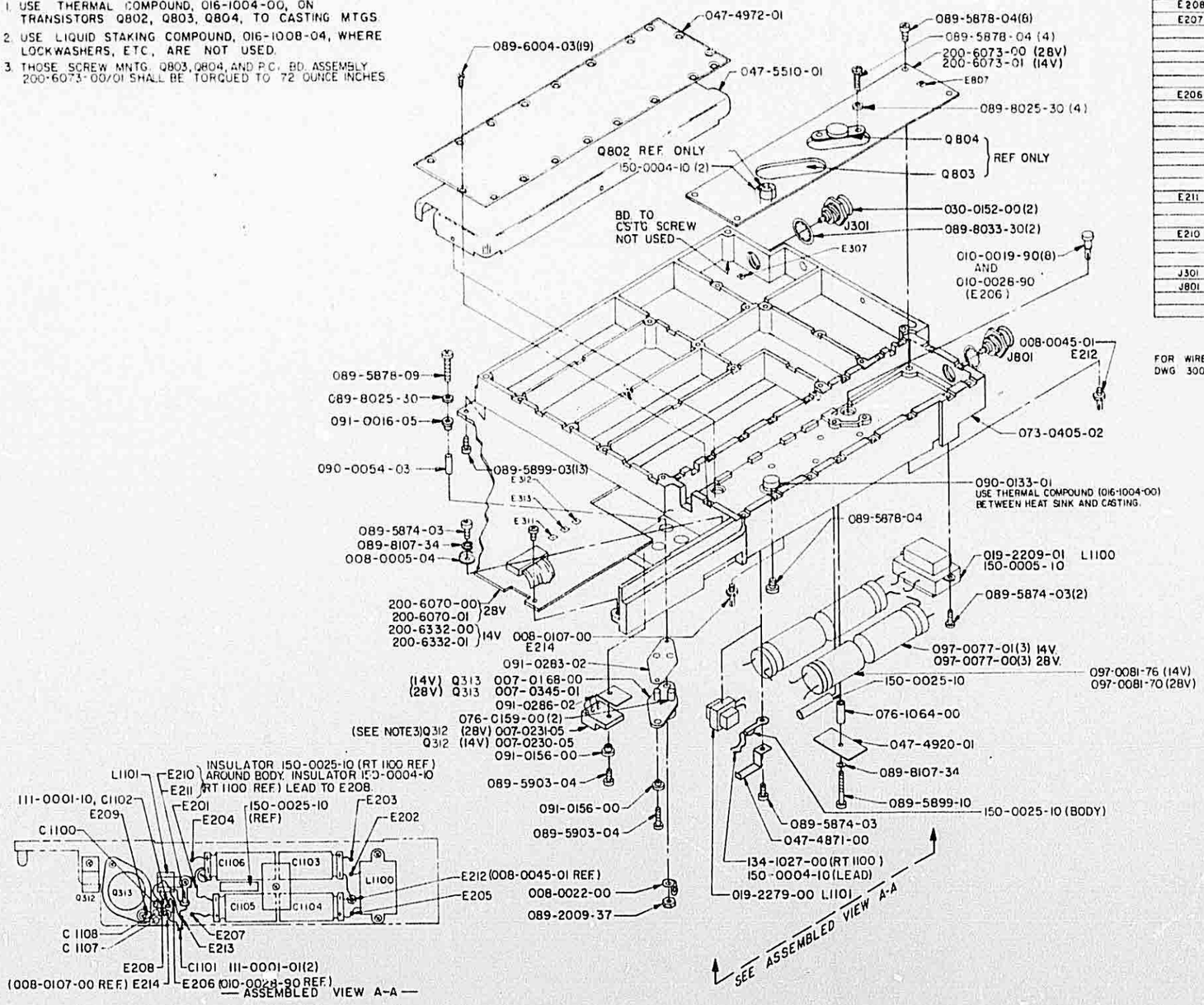

14 & 28V WIRING SCHEDULE					
FROM	TO	DESCRIPTION	KPN	FEET	VOLTS
E205	E203	26" WHT	025-0018-99	.15	14,28
E208	E207	20" BLU	025-0004-06	08	14,28
E207	E204	20" VIO	025-0004-07	15	14,28
E206	E205	18" BRN	025-0005-01	42	14,28
E211	E208	RT 1100 LEAD		22	14,28
E210	E213	RT 1100 LEAD		22	14,28
J301	E307	22" BUSS	026-0003-00	08	14,28
J801	E807	22" BUSS	026-0003-00	08	14,28

FOR WIRES THAT DO NOT TERMINATE ON THIS ASSY, REF DWG 300-2486-00/01, PRACTICAL WIRING DIAGRAM.

FIGURE 6-7 R/T ASSEMBLY
(Dwg. No. 300-02641-0000, R-8)

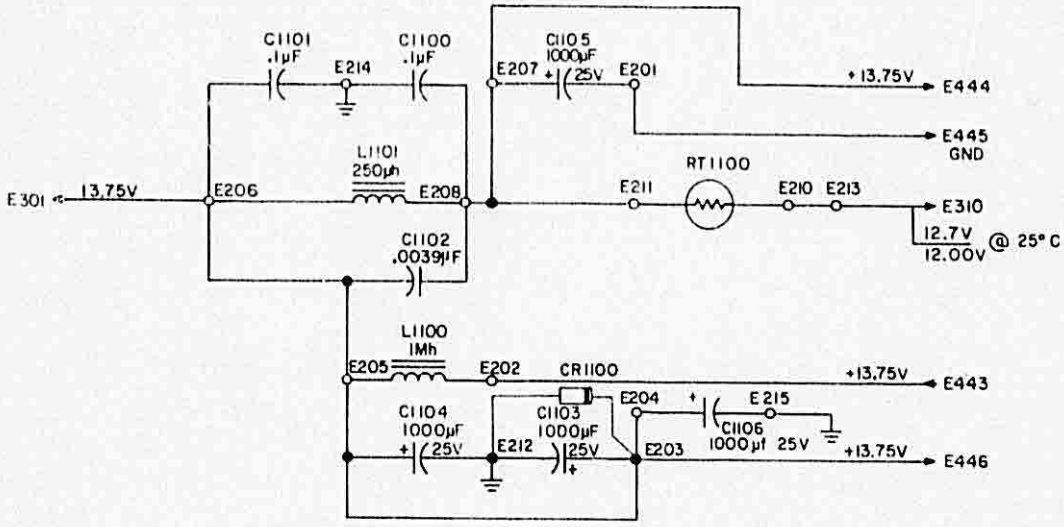

FIGURE 6-5 R/T ASSEMBLY SCHEMATIC 14V
(Dwg No 002-2641-00 R2)

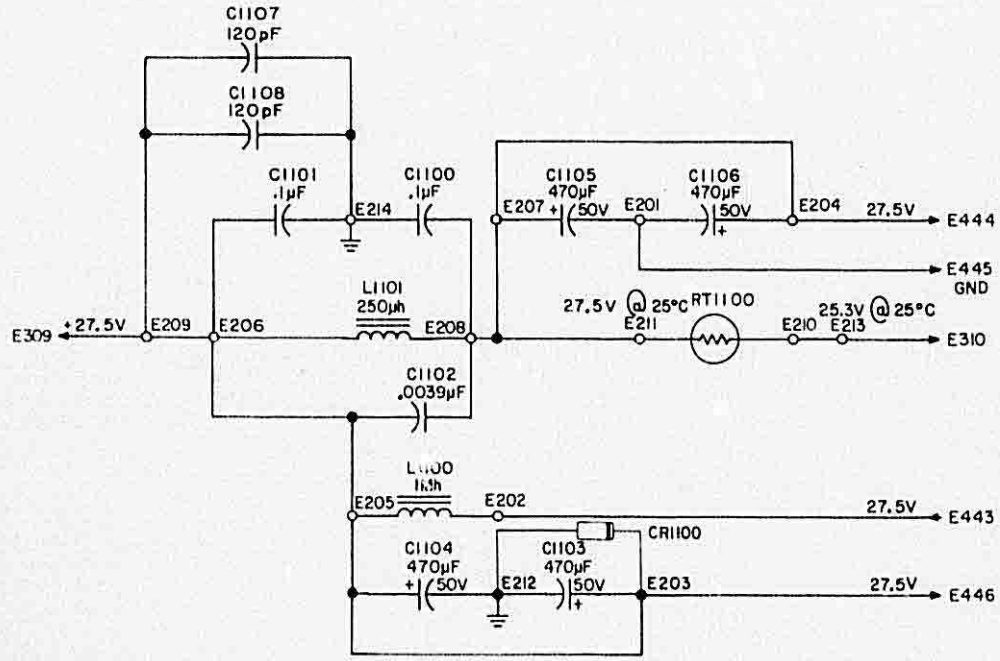

FIGURE 6-9A R/T ASSEMBLY SCHEMATIC (28V)
(Dwg. No. 002-02641-0000, R-2)

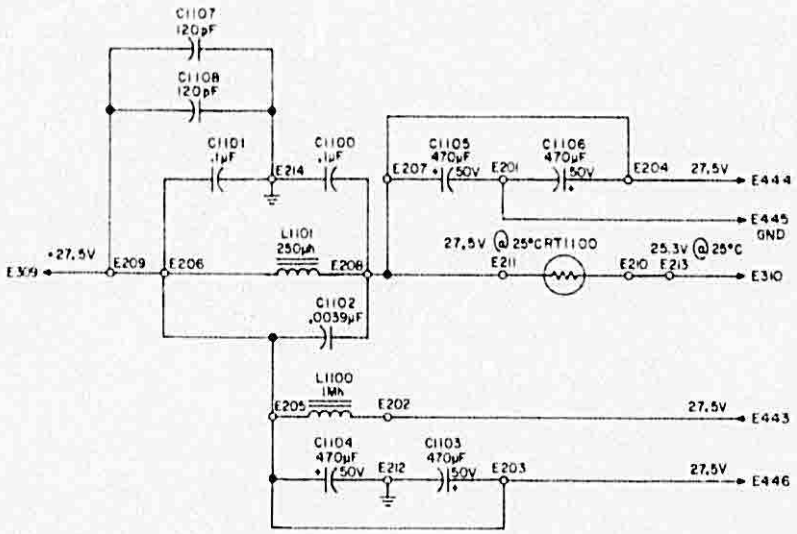

RT ASS'Y "HASH FILTER" 28V

FIGURE 6-5 R/T ASSEMBLY SCHEMATIC 14V
(Dwg No 002-2641-00 R0)

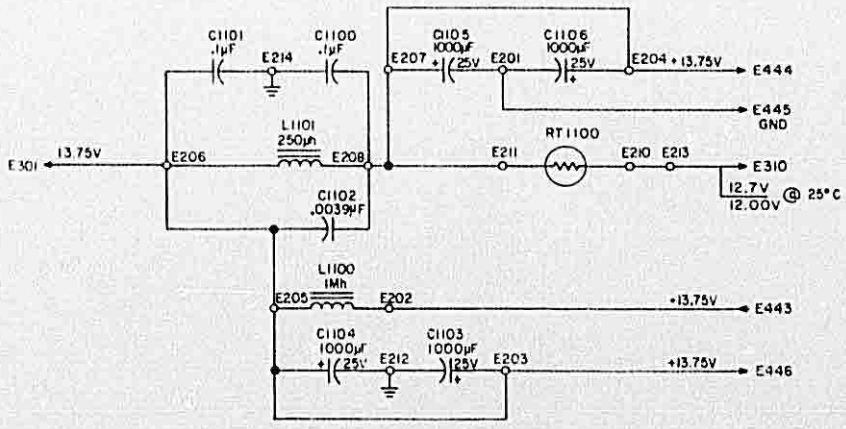

RT ASS'Y "HASH FILTER" 14V

FIGURE 6-9A R/T ASSEMBLY SCHEMATIC (28V)
(Dwg. No. 002-02641-0000, R-0)

200-06068-0000	DSPL BD KX 165	Rev 11
200-06068-0001	DSPL BD KX155/165	Rev 12
200-06068-0010	DSPL BD KX 165	Rev 4
200-06068-0011	DSPL BD KX 155	Rev 5
200-06068-0012	DSPL BD KX155	Rev 1
200-06068-0099	COMMON BOM	Rev AA

SYMBOL	CAS PART NBR	DESCRIPTION	[UOM]	-0000	-0001	-0010	-0011	-0012	-0099
-	009-06068-0000	PC BD DSPLY	[EA]	1	1	.	.	.	.
-	009-06068-0010	PC BD DISPLAY	[EA]	.	.	1	1	1	.
-	012-01168-0000	INSUL SWTCH HLDR	[EA]	.	.	.	.	.	2
-	016-01140-0000	SUPERBONDER 415	[AR]	.	.	.	.	.	1
-	016-01144-0001	ACCELERATOR 11525	[AR]	.	.	.	.	.	1
-	025-00001-0003	WIRE 26 ORN	[IN]	.	.	.	.	.	1.6
-	025-00001-0004	WIRE 26 YEL	[IN]	.	.	.	.	.	4.2
-	025-00017-0005	WIRE 30 GRN	[IN]	.	.	.	.	.	2.4
-	047-05018-0000	SPRING SW 8 POS	[EA]	2	2	.	.	.	.
-	047-05019-0000	SPRING SW 10POS	[EA]	.	.	2	2	2	.
-	057-02185-1011	S/N TAG FLVR SLVR	[EA]	.	.	.	1	.	.
-	088-00720-0000	SPOOL SWITCH	[EA]	.	.	.	.	.	2
-	088-00765-0000	HOUSING SWITCH	[EA]	2	2	.	.	.	.
-	088-00765-0001	HOUSING SWITCH	[EA]	2	2	.	.	.	.
-	088-00766-0001	DETENT WHEEL 53/80	[EA]	4	4	.	.	.	.
-	088-00767-0001	KNOB	[EA]	.	.	.	.	.	2
-	088-00769-0000	SLEEVE LOCKING	[EA]	.	.	.	.	.	2
-	088-00770-0000	HOUSING SWITCH	[EA]	.	.	2	2	2	.
-	088-00770-0001	HOUSING SWITCH	[EA]	.	.	2	2	2	.
-	088-00803-0000	HOLDER SWITCH	[EA]	.	.	.	.	.	2
-	088-00866-0001	KNOB	[EA]	.	.	.	.	.	2
-	088-01022-0001	CONTACT ASSY	[EA]	.	.	4	4	4	.
-	088-01057-0001	KNOB AND SHAFT W/F	[EA]	.	1	.	1	1	.
-	088-01057-0002	KNOB STAMPED	[EA]	1	.	1	.	.	.
-	088-01057-0003	KNOB STAMPED	[EA]	1	1	1	1	1	.
-	089-06414-0003	SCR PHP 2-28X3/16	[EA]	.	.	.	.	.	4
-	089-06689-0006	SCR PHP PLASTITE	[EA]	.	.	.	.	.	4
-	089-08162-0004	WSHR FLT RVT .096	[EA]	.	.	.	.	.	4
-	089-08306-0000	WASHER THRUST	[EA]	.	.	.	.	.	2
-	090-00019-0005	RING RTNR .188	[EA]	.	.	.	.	.	4
-	090-00036-0004	RING RTNR .051	[EA]	.	.	.	.	.	2
-	150-00004-0010	TUBING TFLN 22AWG	[IN]	.	.	.	.	.	1
-	150-00018-0010	TUBING SHRINK WHT	[IN]	.	.	.	.	.	2
-	200-06068-0099	COMMON BOM	[EA]	1	1	1	1	1	.
C 101	111-00001-0033	CAP CR 330PF 200V	[EA]	.	.	.	.	.	1

SYMBOL	CAS PART NBR	DESCRIPTION	[UOM]	-0000	-0001	-0010	-0011	-0012	-0099
C 102	111-00001-0033	CAP CR 330PF 200V	[EA]	.	.	.	.	.	1
C 103	096-01082-0017	CAP TN 6.8UF 15V	[EA]	.	.	.	.	.	1
C 104	111-00001-0063	CAP CR .022UF 200V	[EA]	.	.	.	.	.	1
C 105	111-00001-0063	CAP CR .022UF 200V	[EA]	.	.	.	.	.	1
C 106	111-00001-0000	CAP CR .01UF 50V	[EA]	.	.	1	1	1	.
CR 101	007-06016-0000	DIO S 1N4154	[EA]	.	.	.	.	.	1
CR 102	007-06016-0000	DIO S 1N4154	[EA]	.	.	.	.	.	1
CR 103	007-05046-0003	DIO Z 1N5239B	[EA]	.	.	.	.	.	1
CR 104	007-05011-0036	DIO Z 100V 1W 5%	[EA]	.	.	.	.	.	1
CR 105	007-05045-0050	DIO Z 1/4M130Z5	[EA]	1	1	.	.	.	.
CR 105	999-09999-0098	PLACE HOLDER	[EA]	.	.	0	0	0	.
CR 106	007-05045-0050	DIO Z 1/4M130Z5	[EA]	1	1	.	.	.	.
CR 106	999-09999-0098	PLACE HOLDER	[EA]	.	.	0	0	0	.
CR 107	007-05045-0050	DIO Z 1/4M130Z5	[EA]	1	1	.	.	.	.
CR 107	999-09999-0098	PLACE HOLDER	[EA]	.	.	0	0	0	.
CR 108	007-05045-0050	DIO Z 1/4M130Z5	[EA]	1	1	.	.	.	.
CR 108	999-09999-0098	PLACE HOLDER	[EA]	.	.	0	0	0	.
CR 109	007-06106-0000	DIO 1N4156	[EA]	.	.	.	.	.	1
CR 110	007-06023-0000	DIO G 1N277	[EA]	.	.	1	1	1	.
CR 111	007-06023-0000	DIO G 1N277	[EA]	.	.	1	1	1	.
CR 112	007-06023-0000	DIO G 1N277	[EA]	.	.	1	1	1	.
CR 113	007-06023-0000	DIO G 1N277	[EA]	.	.	1	1	1	.
I 101	120-00161-0000	HIGH VOLT DSPLY DR	[EA]	.	.	.	.	.	1
I 102	120-06045-0000	IC CD4022BFX	[EA]	.	.	.	.	.	1
J 101	030-02335-0000	CONN DISPLAY 56 CONTAC	[EA]	.	.	.	.	.	1
Q 102	007-00254-0000	XSTR S PNP MPSA92	[EA]	.	.	.	.	.	1
R 101	131-00334-0013	RES CF 330K EW 5%	[EA]	.	.	.	.	.	1
R 102	131-00334-0013	RES CF 330K EW 5%	[EA]	.	.	.	.	.	1
R 103	131-00823-0023	RES CF 82K QW 5%	[EA]	.	.	.	.	.	1
R 104	131-00334-0013	RES CF 330K EW 5%	[EA]	.	.	.	.	.	1
R 105	131-00334-0013	RES CF 330K EW 5%	[EA]	.	.	.	.	.	1
R 106	133-00133-0002	RES VA 15K QW 20%	[EA]	.	.	.	.	.	1
R 107	133-00133-0001	RES VA 15K QW 20%	[EA]	.	.	.	.	.	1
R 108	131-00134-0023	RES CF 130K QW 5%	[EA]	.	.	.	.	.	1
R 109	131-00913-0023	RES CF 91K QW 5%	[EA]	.	.	.	.	.	1
R 111	131-00224-0023	RES CF 220K QW 5%	[EA]	.	.	.	.	.	1
R 112	131-00330-0013	RES CF 33 EW 5%	[EA]	.	.	.	.	.	1
R 114	131-00182-0013	RES CF 1.8K EW 5%	[EA]	.	.	.	.	.	1
S 102	031-00343-0003	SWITCH SPDT	[EA]	.	.	.	.	.	1
S 103	031-00343-0003	SWITCH SPDT	[EA]	.	.	.	.	.	1
U 101	015-00041-0001	RES MOD 220K150V2%	[AR]	.	.	.	.	.	0
U 102	015-00046-0001	NTWK RES/DIO	[EA]	.	.	.	.	.	1

SYMBOL	CAS PART NBR	DESCRIPTION	[UOM]	-0000	-0001	-0010	-0011	-0012	-0099
U 103	015-00046-0001	NTWK RES/DIO	[EA]	.	.	.	.	.	1
V 101	134-05005-0002	PHOTODETECTOR	[EA]	1	1	1	1	.	.

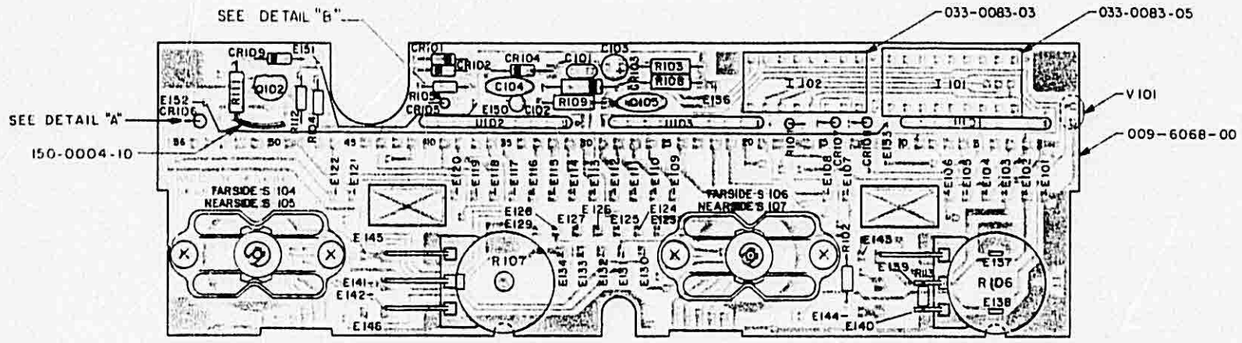

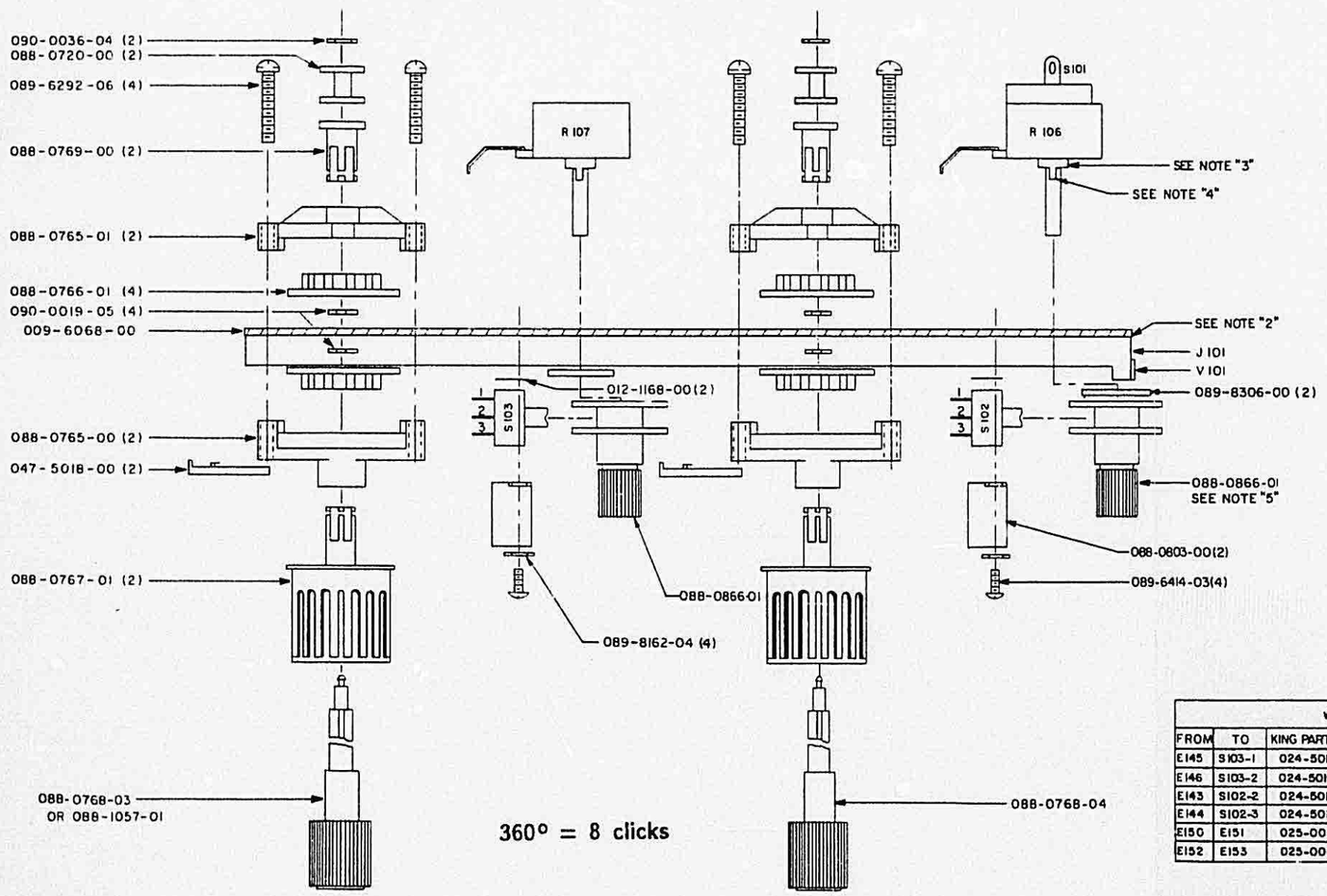

NOTES:

1. PRIOR TO POST COATING WITH CLEAR URETHANE (016-1040-00) MASK OFF THE FOLLOWING AREAS; ALL MOUNTING AREAS, ALL "E" NUMBERS, R106, R107, V101, ALL SWITCHES, J101, I.C. SOCKETS
2. J101 SHALL BE FLUSH TO P.C. BOARD WITHIN .005
3. POT SHAFTS R106, R107 TO BE MOUNTED PERPENDICULAR TO P.C. BOARD.
4. TABS, INDICATED, OF R106 & R107 TO BE FORMED-OVER & SOLDERED TO P.C. BOARD, HOLDING A MAX. HEIGHT OF .035 OFF BOARD.
5. CHECK KNOBS, 088-0866-01, TO INSURE THAT FLASH ON PART WILL NOT IMPAIR ROTATION OF KNOB.
6. AFTER ASSEMBLY, APPLY A SMALL AMOUNT OF EPOXY (016-1122-00) TO THE RETANING RING (090-0036-04)(2) TO SECURE IT TO THE SHAFT(088-0768-02/03/04).

REWORK NOTES:

A. CUT P.C. PATH ON FARSIDE OF P.C. BOARD AT THE P.C. PAD OF E133 AND CUT SAME P.C. PATH WHERE IT CONNECTS TO THE P.C. PAD FOR THE LEAD OF R107. THEN CONNECT THESE TWO POINTS WITH MAG WIRE ON FARSIDE OF P.C. BOARD MAG WIRE SHOULD BE ROUTED AS SHOWN WITH DOTTED LINE.

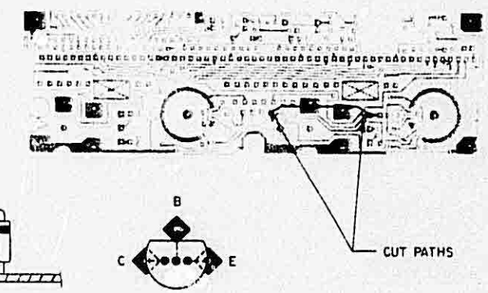

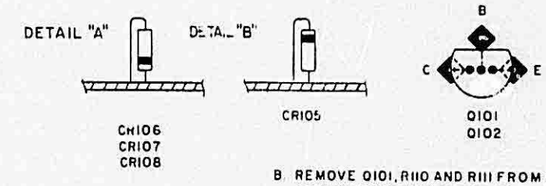

B. REMOVE Q101, R110 AND R111 FROM BOARD. REPLACE R111 AS SHOWN. ADD SLEEVING (150-0004-10) TO LEAD SOLDERED TO EMITTER PAD OF DELETED Q101.

WIRE CHART

FROM	TO	KING PART NUMBER	DESCRIPTION	FEET
E145	S103-1	024-5019-01	# 30 RED	.05
E146	S103-2	024-5019-01	# 30 RED	.05
E143	S102-2	024-5019-01	# 30 RED	.05
E144	S102-3	024-5019-01	# 30 RED	.05
E150	E151	025-0001-03	# 26 ORANGE	.13
E152	E153	025-0001-04	# 26 YELLOW	.35

FIGURE 6-10B DISPLAY BOARD
(Dwg. No. 300-06068-0000, R-10)

BENDIX/KING

KX 155/165
VHF NAV/COMM TRANSCEIVER

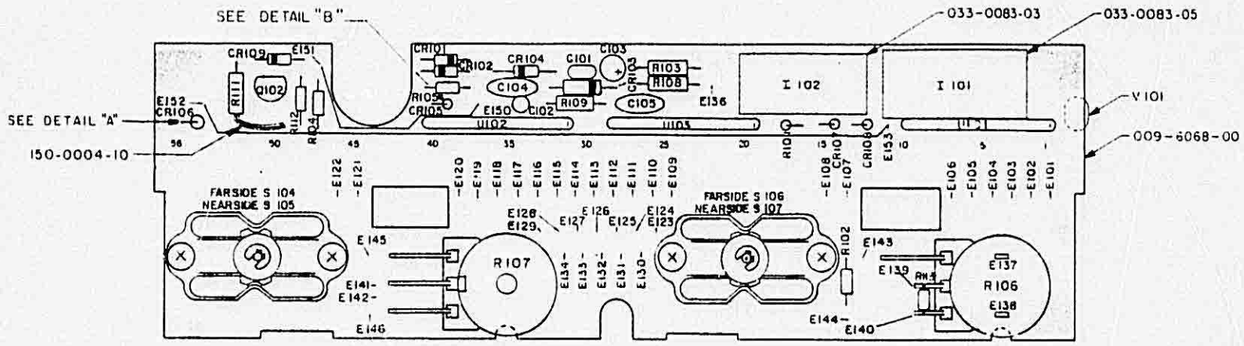

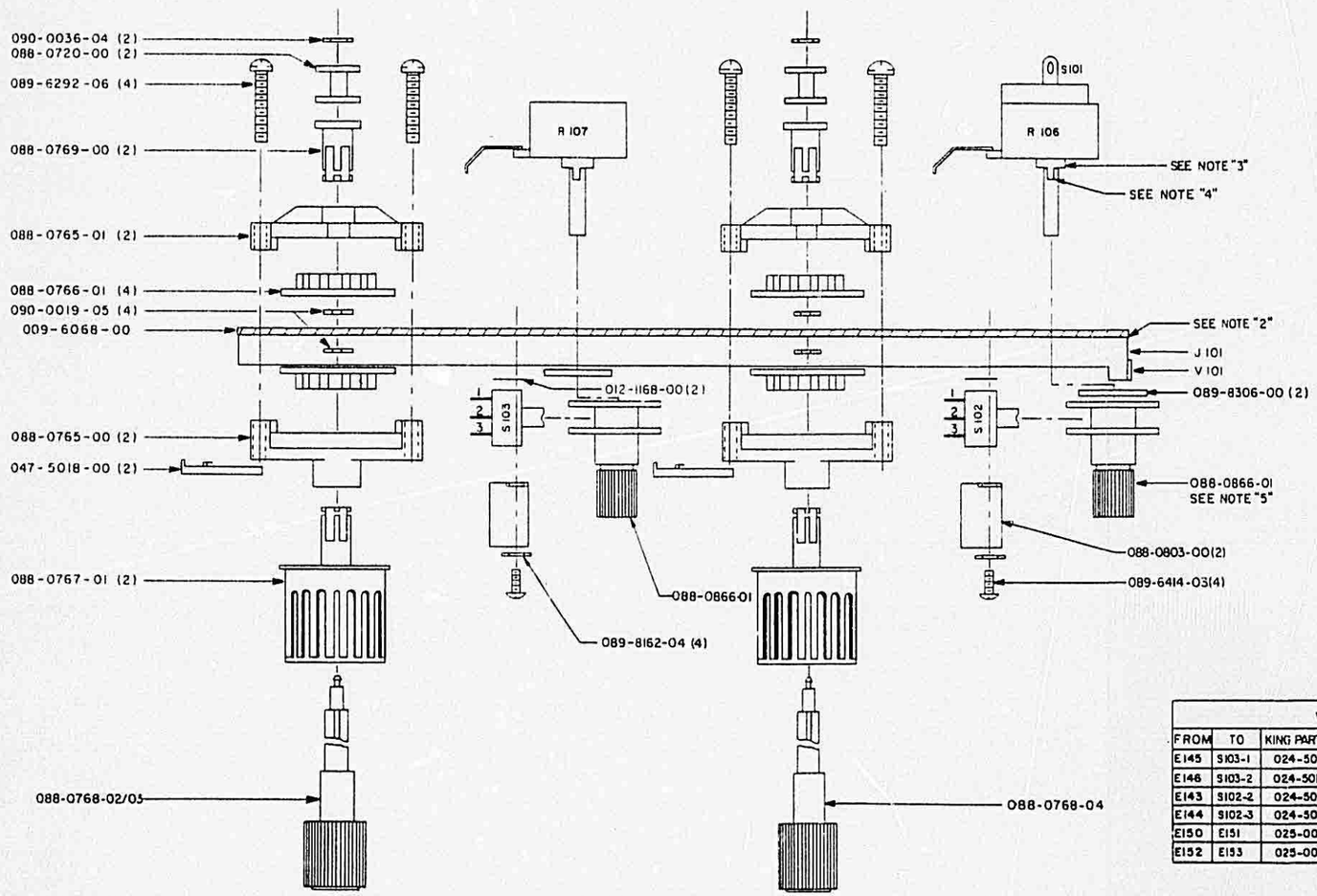

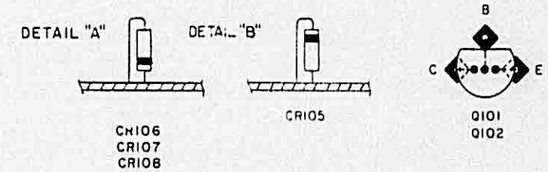

NOTES:

1. PRIOR TO POST COATING WITH CLEAR URETHANE (016-1040-00) MASK OFF THE FOLLOWING AREAS; ALL MOUNTING AREAS, ALL "E" NUMBERS, R106, R107, V101, ALL SWITCHES, J101, I.C SOCKETS.
2. J101 SHALL BE FLUSH TO P.C. BOARD WITHIN .005
3. POT SHAFTS R106, R107 TO BE MOUNTED PERPENDICULAR TO P.C. BOARD.
4. TABS, INDICATED, OF R106 & R107 TO BE FORMED-OVER & SOLDERED TO P.C. BOARD, HOLDING A MAX. HEIGHT OF .035 OFF BOARD.
5. CHECK KNOBS, 088-0866-01, TO INSURE THAT FLASH ON PART WILL NOT IMPAIR ROTATION OF KNOB.
6. AFTER ASSEMBLY, APPLY A SMALL AMOUNT OF EPOXY (016-1122-00) TO THE RETANING RING (090-0036-04)(2) TO SECURE IT TO THE SHAFT(088-0768-02/03/04).

WIRE CHART

FROM	TO	KING PART NUMBER	DESCRIPTION	FEET
E145	S103-1	024-5019-01	#30 RED	.05
E146	S103-2	024-5019-01	#30 RED	.05
E143	S102-2	024-5019-01	#30 RED	.05
E144	S102-3	024-5019-01	#30 RED	.05
E150	E151	025-0001-03	#26 ORANGE	.13
E152	E153	025-0001-04	#26 YELLOW	.35

FIGURE 6-10A DISPLAY BOARD
(Dwg. No. 300-06068-0000, R-9)

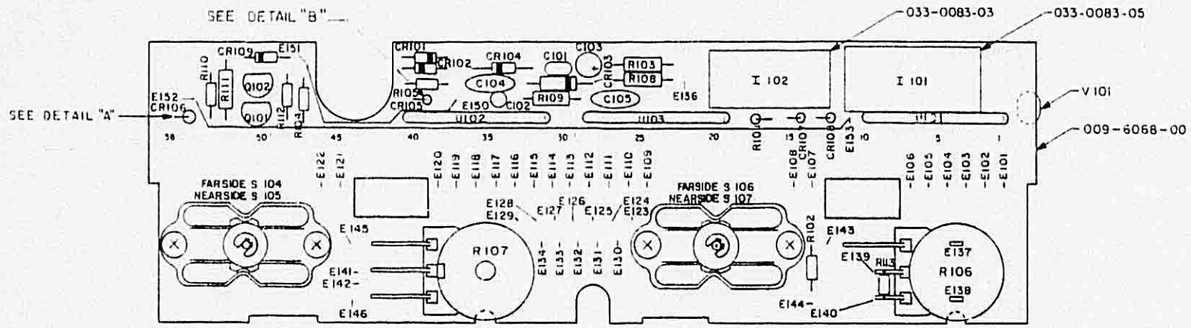

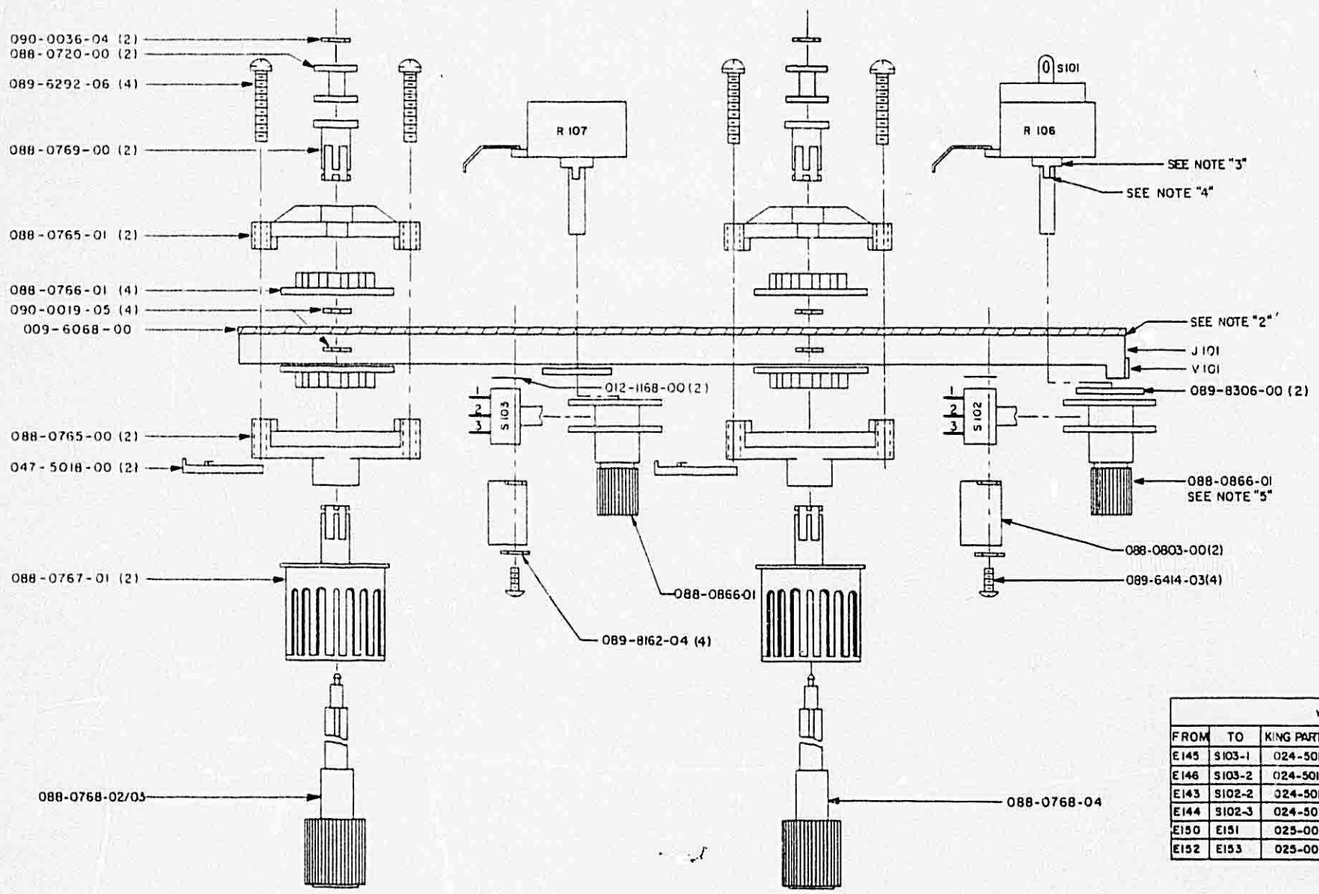

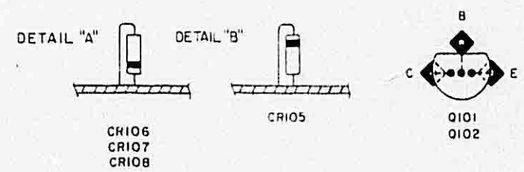

NOTES:

1. PRIOR TO POST COATING WITH CLEAR URETHANE (016-1040-00) MASK OFF THE FOLLOWING AREAS; ALL MOUNTING AREAS, ALL "E" NUMBERS, R106, R107, V101, ALL SWITCHES, J101, I.C. SOCKETS.
2. J101 SHALL BE FLUSH TO P.C. BOARD WITHIN .005
3. POT SHAFTS R106, R107 TO BE MOUNTED PERPENDICULAR TO P.C. BOARD
4. TABS, INDICATED, OF R106 & R107 TO BE FORMED-OVER & SOLDERED TO P.C. BOARD, HOLDING A MAX. HEIGHT OF .035 OFF BOARD.
5. CHECK KNOBS, 088-0866-01, TO INSURE THAT FLASH ON PART WILL NOT IMPAIR ROTATION OF KNOB.

WIRE CHART

FROM	TO	KING PART NUMBER	DESCRIPTION	FEET
E145	S103-1	024-5019-01	# 30 RED	.05
E146	S103-2	024-5019-01	# 30 RED	.05
E143	S102-2	024-5019-01	# 30 RED	.05
E144	S102-3	024-5019-01	# 30 RED	.05
E150	E151	025-0001-03	# 26 ORANGE	.13
E152	E153	025-0001-04	# 26 YELLOW	.35

FIGURE 6-10 DISPLAY BOARD
(Dwg. No. 300-06068-0000, R-6)

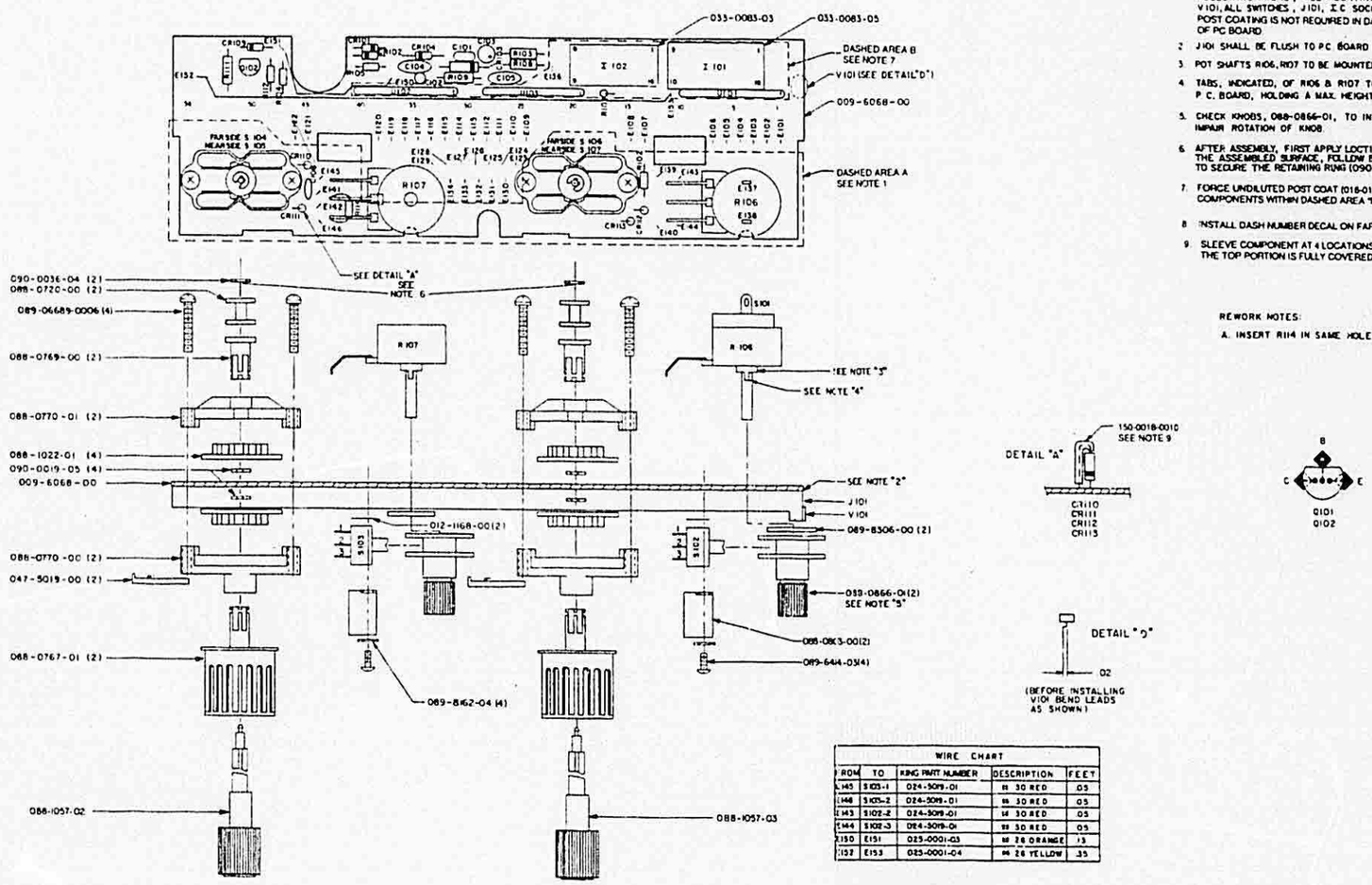

NOTES:

1. PRIOR TO POST COATING WITH CLEAR URETHANE (016-1040-001) MASK OFF THE FOLLOWING AREAS; ALL MOUNTING AREAS, ALL "E" NUMBERS, R106, R107, V101, ALL SWITCHES, J101, I.C SOCKETS
   POST COATING IS NOT REQUIRED IN DASHED AREA "A", ON BOTH NEARSIDE AND FARSIDE OF PC BOARD
2. J101 SHALL BE FLUSH TO P.C. BOARD WITHIN .005
3. POT SHAFTS R106, R107 TO BE MOUNTED PERPENDICULAR TO P.C. BOARD.
4. TABS, INDICATED, OF R106 & R107 TO BE FORMED-OVER & SOLDERED TO P.C. BOARD, HOLDING A MAX. HEIGHT OF .035 OFF BOARD.
5. CHECK KNOBS, 088-0866-01, TO INSURE THAT FLASH ON PART WILL NOT IMPAIR ROTATION OF KNOB.
6. AFTER ASSEMBLY, FIRST APPLY LOCTITE 11525 ACCELERATOR (016-01144-0001) ON THE ASSEMBLED SURFACE, FOLLOW BY A SMALL AMOUNT OF LOCTITE 415 (016-01140-0000) TO SECURE THE RETAINING RING (090-00036-0004) (2) TO THE SHAFT (088-00057-0002 & -0003).
7. FORCE UNDILUTED POST COAT (016-01040-0000) BETWEEN AND UNDER LEGS OF COMPONENTS WITHIN DASHED AREA "B" OF PC BOARD.
8. INSTALL DASH NUMBER DECAL ON FARSIDE OF PC BOARD AFTER 200-06068-[ ]
9. SLEEVE COMPONENT AT 4 LOCATIONS: CR110, CR111, CR112, AND CR113. MAKE SURE THAT THE TOP PORTION IS FULLY COVERED

REWORK NOTES:

A. INSERT R114 IN SAME HOLES AS R107 AS SHOWN.

WIRE CHART

FROM	TO	KING PART NUMBER	DESCRIPTION	FEET
E145	S103-1	024-5019-01	#1 30 RED	.05
E146	S103-2	024-5019-01	#6 30 RED	.05
E143	S102-2	024-5019-01	#4 30 RED	.05
E144	S102-3	024-5019-01	#9 30 RED	.05
E150	E151	025-0001-03	#8 26 ORANGE	.13
E152	E153	025-0001-04	#6 26 YELLOW	.35

FIGURE 6-11D Display Board
(Dwg. No. 300-06068-0010, Rev. AA, sheet 1 of 1)

BENDIX/KING

KX 155/165
VHF NAV/COMM TRANSCEIVER

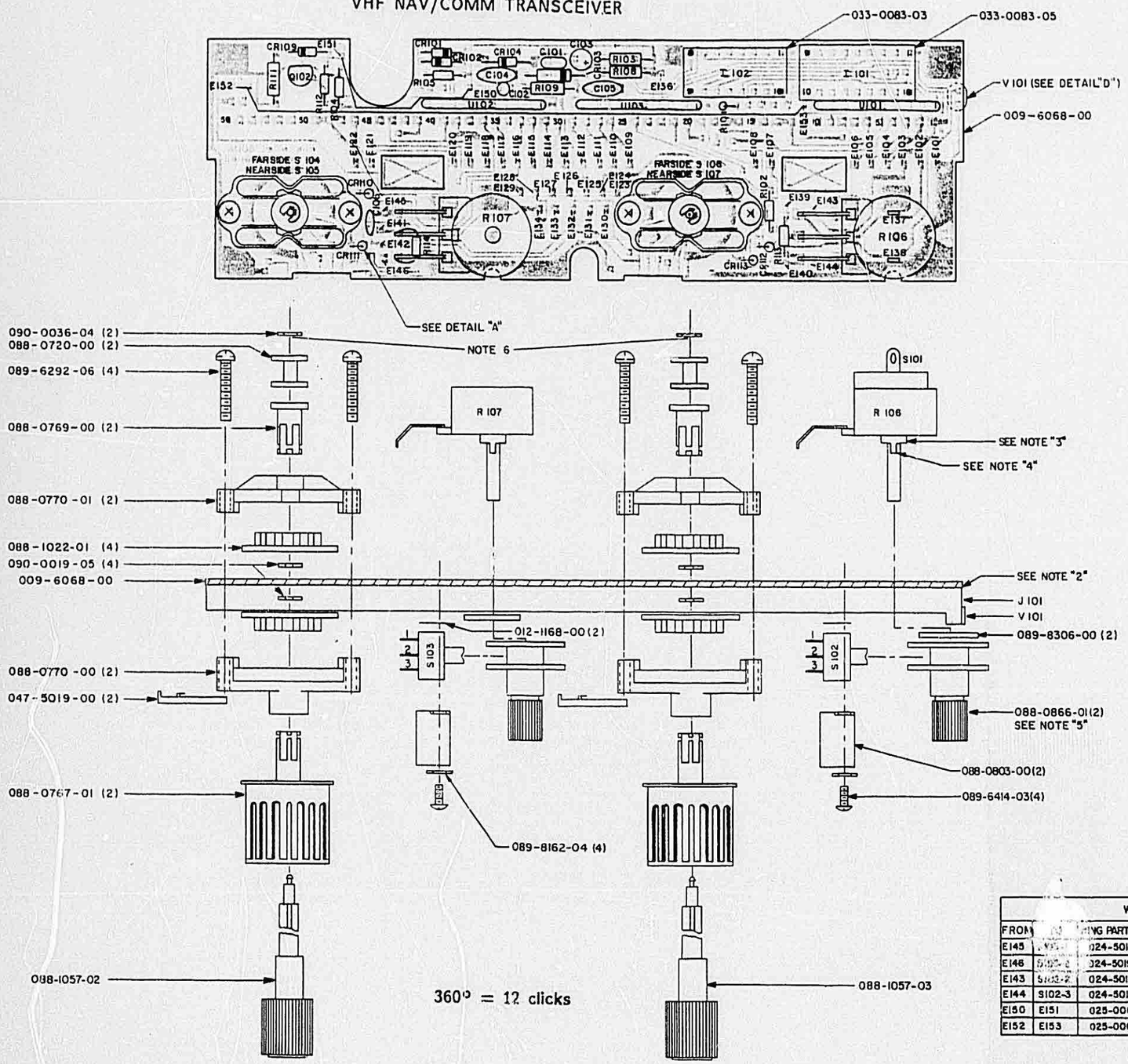

NOTES:

1. PRIOR TO POST COATING WITH CLEAR URETHANE (016-1040-00) MASK OFF THE FOLLOWING AREAS; ALL MOUNTING AREAS, ALL "E" NUMBERS, R106, R107, V101, ALL SWITCHES, J101, I.C. SOCKETS.
2. J101 SHALL BE FLUSH TO P.C. BOARD WITHIN .005
3. POT SHAFTS R106, R107 TO BE MOUNTED PERPENDICULAR TO P.C. BOARD.
4. TABS, INDICATED, OF R106 & R107 TO BE FORMED-OVER & SOLDERED TO P.C. BOARD, HOLDING A MAX. HEIGHT OF .035 OFF BOARD.
5. CHECK KNOBS, 088-0866-01, TO INSURE THAT FLASH ON PART WILL NOT IMPAIR ROTATION OF KNOB.
6. AFTER ASSEMBLY, APPLY A SMALL AMOUNT OF EPOXY (016-1122-00) TO THE RETAINING RING (090-0036-04)(2) TO SECURE IT TO THE SHAFT (088-0768-02/03/04).

REWORK NOTES:

A. INSERT R114 IN SAME HOLES AS R107 AS SHOWN.

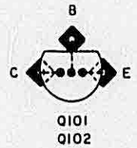

WIRE CHART

FROM	TO	WIRING PART NUMBER	DESCRIPTION	FEET
E145	[illegible]	024-5019-01	# 30 RED	.05
E146	S102-2	024-5019-01	# 30 RED	.05
E143	S102-2	024-5019-01	# 30 RED	.05
E144	S102-3	024-5019-01	# 30 RED	.05
E150	E151	025-0001-03	# 26 ORANGE	.13
E152	E153	025-0001-04	# 26 YELLOW	.35

FIGURE 6-11C DISPLAY BOARD
(Dwg. No. 300-06068-0010, R-11)

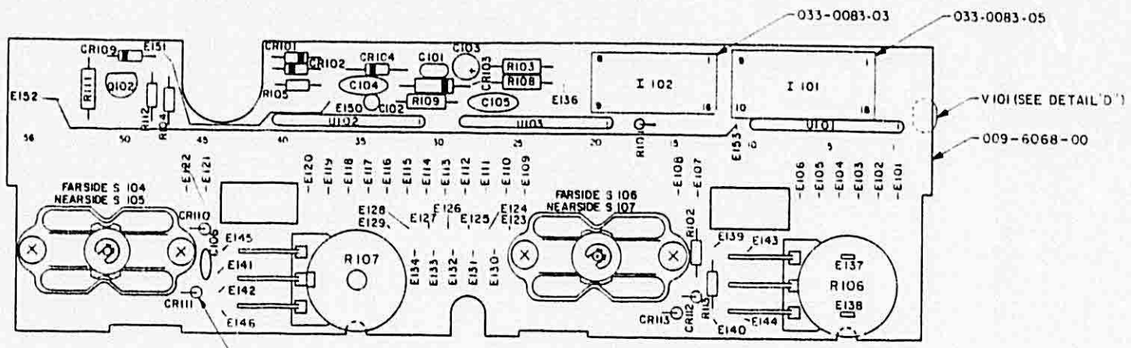

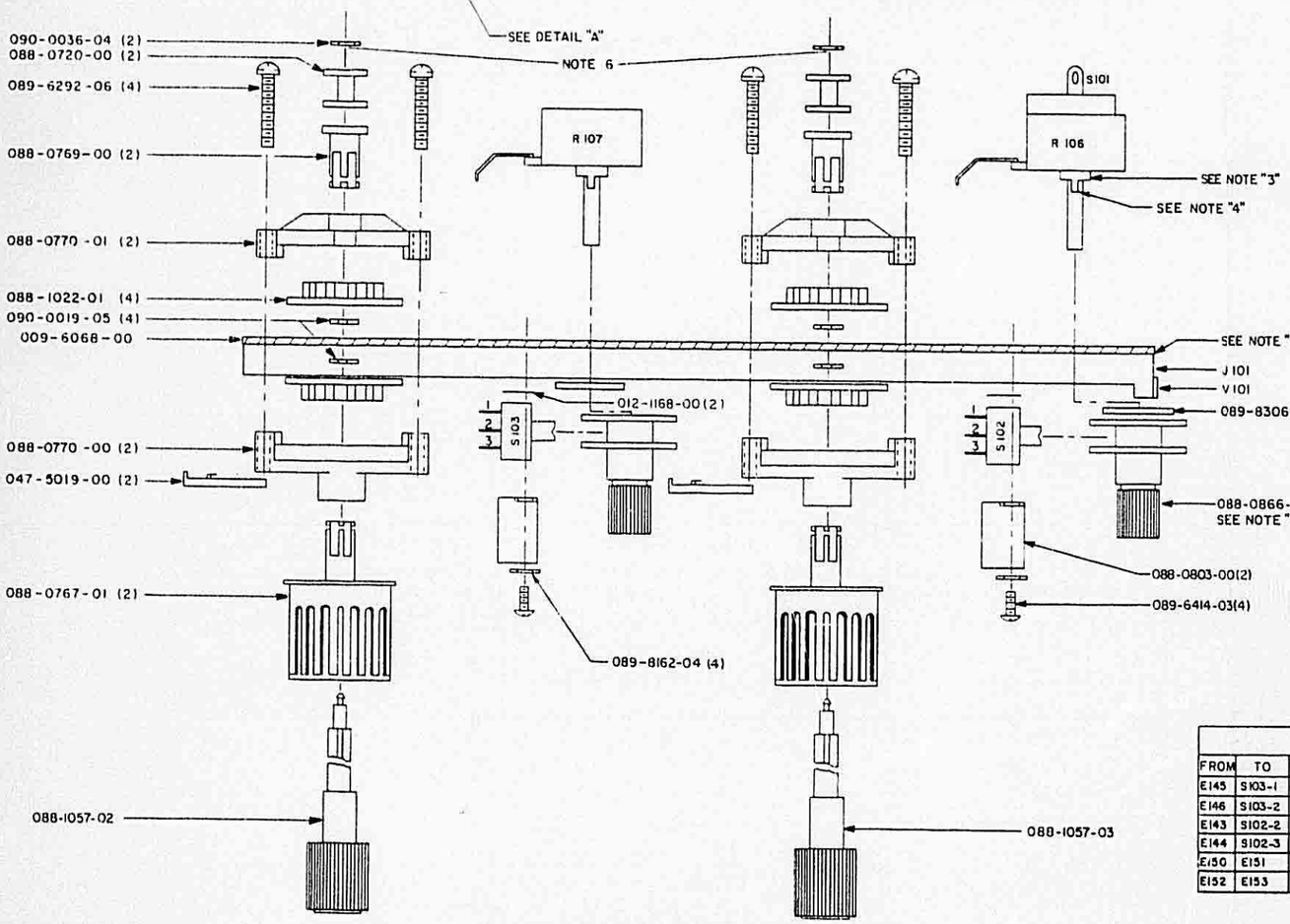

NOTES:

1. PRIOR TO POST COATING WITH CLEAR URETHANE (016-1040-00) MASK OFF THE FOLLOWING AREAS; ALL MOUNTING AREAS, ALL "E" NUMBERS, R106, R107, V101, ALL SWITCHES, J101, I.C SOCKETS
2. J101 SHALL BE FLUSH TO P.C. BOARD WITHIN .005
3. POT SHAFTS R106, R107 TO BE MOUNTED PERPENDICULAR TO P.C. BOARD
4. TABS, INDICATED, OF R106 & R107 TO BE FORMED-OVER & SOLDERED TO P.C. BOARD, HOLDING A MAX. HEIGHT OF .035 OFF BOARD.
5. CHECK KNOBS, 088-0866-01, TO INSURE THAT FLASH ON PART WILL NOT IMPAIR ROTATION OF KNOB.
6. AFTER ASSEMBLY, APPLY A SMALL AMOUNT OF EPOXY (016-1122-00) TO THE RETAINING RING (090-0036-04)(2) TO SECURE IT TO THE SHAFT (088-0768-02/03/04).

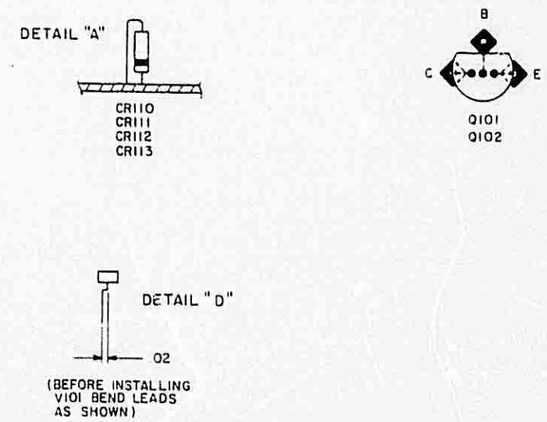

WIRE CHART

FROM	TO	KING PART NUMBER	DESCRIPTION	FEET
E145	S103-1	024-5019-01	# 30 RED	.05
E146	S103-2	024-5019-01	# 30 RED	.05
E143	S102-2	024-5019-01	# 30 RED	.05
E144	S102-3	024-5019-01	# 30 RED	.05
E150	E151	025-0001-03	# 26 ORANGE	.13
E152	E153	025-0001-04	# 26 YELLOW	.35

FIGURE 6-11B DISPLAY BOARD
(Dwg. No. 300-06068-0010, R-10)

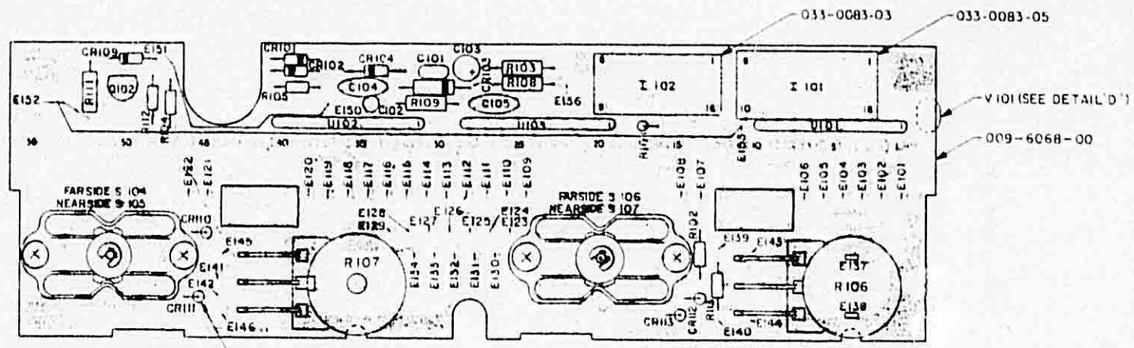

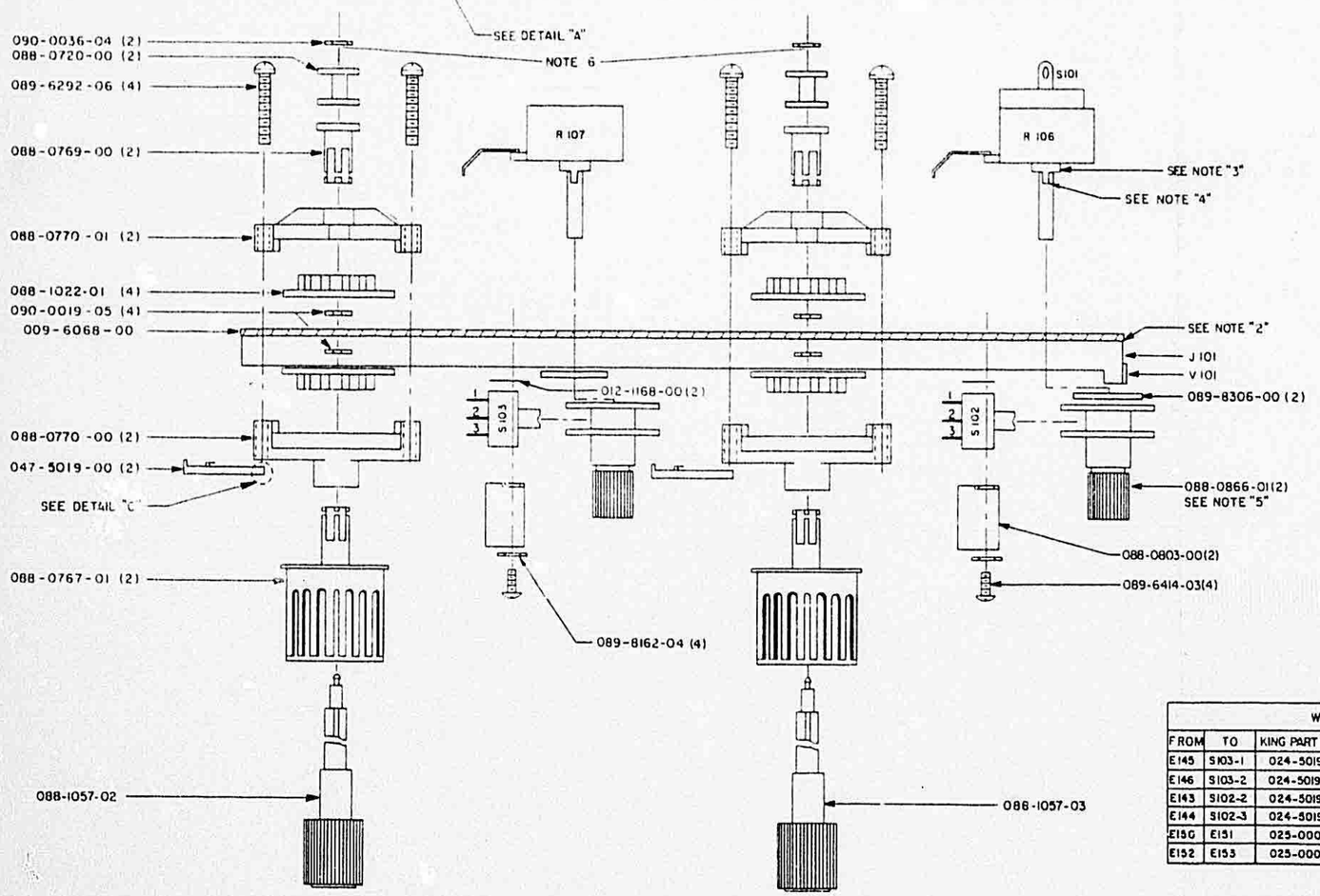

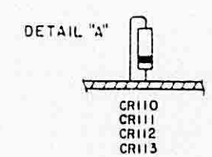

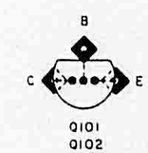

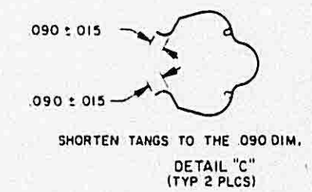

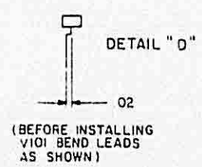

NOTES:

1. PRIOR TO POST COATING WITH CLEAR URETHANE (016-1040-001) MASK FOLLOWING AREAS, ALL MOUNTING AREAS, ALL "E" NUMBERS, R106, V101, ALL SWITCHES, J101, I.C SOCKETS
2. J101 SHALL BE FLUSH TO P.C BOARD WITHIN .005
3. POT SHAFTS R106, R107 TO BE MOUNTED PERPENDICULAR TO P.C BOARD.
4. TABS, INDICATED, OF R106 & R107 TO BE FORMED-OVER & SOLDERED TO P.C. BOARD, HOLDING A MAX. HEIGHT OF .035 OFF BOARD.
5. CHECK KNOBS, 088-0866-01, TO INSURE THAT FLASH ON PART WILL NOT IMPAIR ROTATION OF KNOB.
6. AFTER ASSEMBLY, APPLY A SMALL AMOUNT OF EPOXY (016-1122-00) TO THE RETAINING RING (090-0036-04)(2) TO SECURE IT TO THE SHAFT (088-0768-02/03/04).

WIRE CHART

FROM	TO	KING PART NUMBER	DESCRIPTION	FEET
E145	S103-1	024-5019-01	# 30 RED	.05
E146	S103-2	024-5019-01	# 30 RED	.05
E143	S102-2	024-5019-01	# 30 RED	.05
E144	S102-3	024-5019-01	# 30 RED	.05
E150	E151	025-0001-03	# 26 ORANGE	.13
E152	E153	025-0001-04	# 26 YELLOW	.35

FIGURE 6-11A DISPLAY BOARD
(Dwg. No. 300-06068-0010, R-8)

BENDIX/KING

KX 155/165
VHF NAV/COMM TRANSCEIVER

NOTES:

1. PRIOR TO POST COATING WITH CLEAR URETHANE (016-1040-001) MASK OFF THE FOLLOWING AREAS; ALL MOUNTING AREAS, ALL "E" NUMBERS, R106, R107, V101, ALL SWITCHES, J101, I.C SOCKETS
2. J101 SHALL BE FLUSH TO P.C BOARD WITHIN .005
3. POT SHAFTS R106, R107 TO BE MOUNTED PERPENDICULAR TO P.C BOARD
4. TABS, INDICATED, OF R106 & R107 TO BE FORMED-OVER & SOLDERED TO P.C. BOARD, HOLDING A MAX. HEIGHT OF .035 OFF BOARD.
5. CHECK KNOBS, 088-0866-01, TO INSURE THAT FLASH ON PART WILL NOT IMPAIR ROTATION OF KNOB.

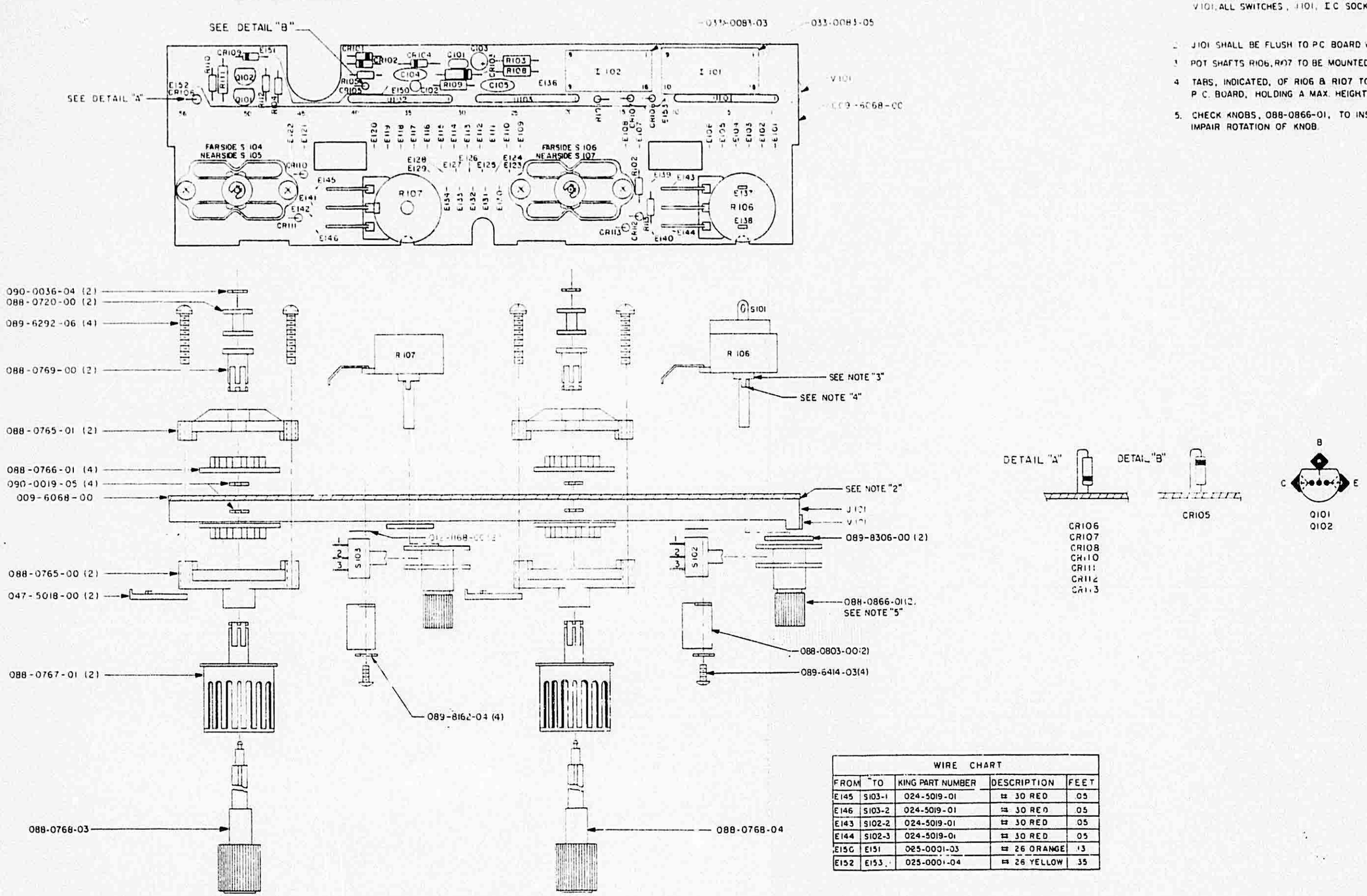

WIRE CHART				
FROM	TO	KING PART NUMBER	DESCRIPTION	FEET
E145	S103-1	024-5019-01	# 30 RED	.05
E146	S103-2	024-5019-01	# 30 RED	.05
E143	S102-2	024-5019-01	# 30 RED	.05
E144	S102-3	024-5019-01	# 30 RED	.05
E150	E151	025-0001-03	# 26 ORANGE	.13
E152	E153	025-0001-04	# 26 YELLOW	.35

FIGURE 6-11 DISPLAY BOARD
(Dwg. No. 300-06068-0010, R-0)

FIGURE 6-12B DISPLAY BOARD SCHEMATIC
(Dwg. No. 002-06068-0000, R-15)

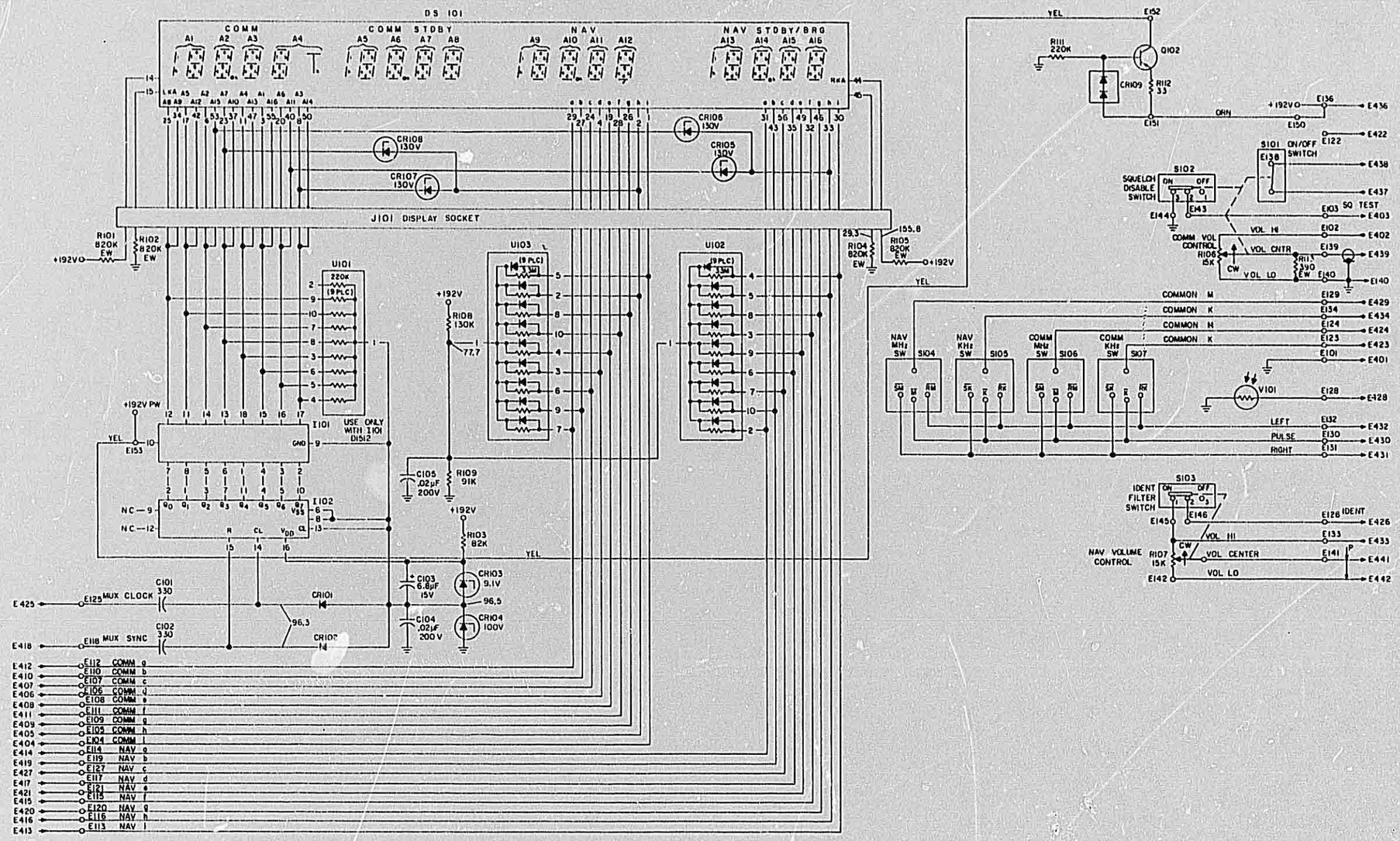
DS 101
COMM
COMM STDBY
NAV
NAV STDBY/BRG
J101 DISPLAY SOCKET
U101
U102
U103
I101
I102
USE ONLY WITH I101 DIS12
R101 820K EW
R102 820K EW
R105 820K EW
R104 820K EW
R108 130K
R109 91K
R103 82K
C101 330
C102 330
C105 .02µF 200V
C103 6.8µF 15V
C104 .02µF 200V
CR101
CR102
CR103 9.1V
CR104 100V
CR105 130V
CR106 130V
CR107 130V
CR108 130V
+192V
+192V PW
MUX CLOCK
MUX SYNC
COMM a
COMM b
COMM c
COMM d
COMM e
COMM f
COMM g
COMM h
COMM i
NAV a
NAV b
NAV c
NAV d
NAV e
NAV f
NAV g
NAV h
NAV i
Q102
R111 220K
R112 33
CR109
S101 ON/OFF SWITCH
S102 SQUELCH DISABLE SWITCH
R106 15K COMM VOL CONTROL
R113 390 EW
COMMON M
COMMON K
NAV MHz SW S104
NAV KHz SW S105
COMM MHz SW S106
COMM KHz SW S107
V101
LEFT
PULSE
RIGHT
S103 IDENT FILTER SWITCH
R107 15K NAV VOLUME CONTROL
VOL HI
VOL CENTER
VOL LO
IDENT
SQ TEST

FIGURE 6-12A DISPLAY BOARD SCHEMATIC
(Dwg. No. 002-06068-0000, R-14)

/ER

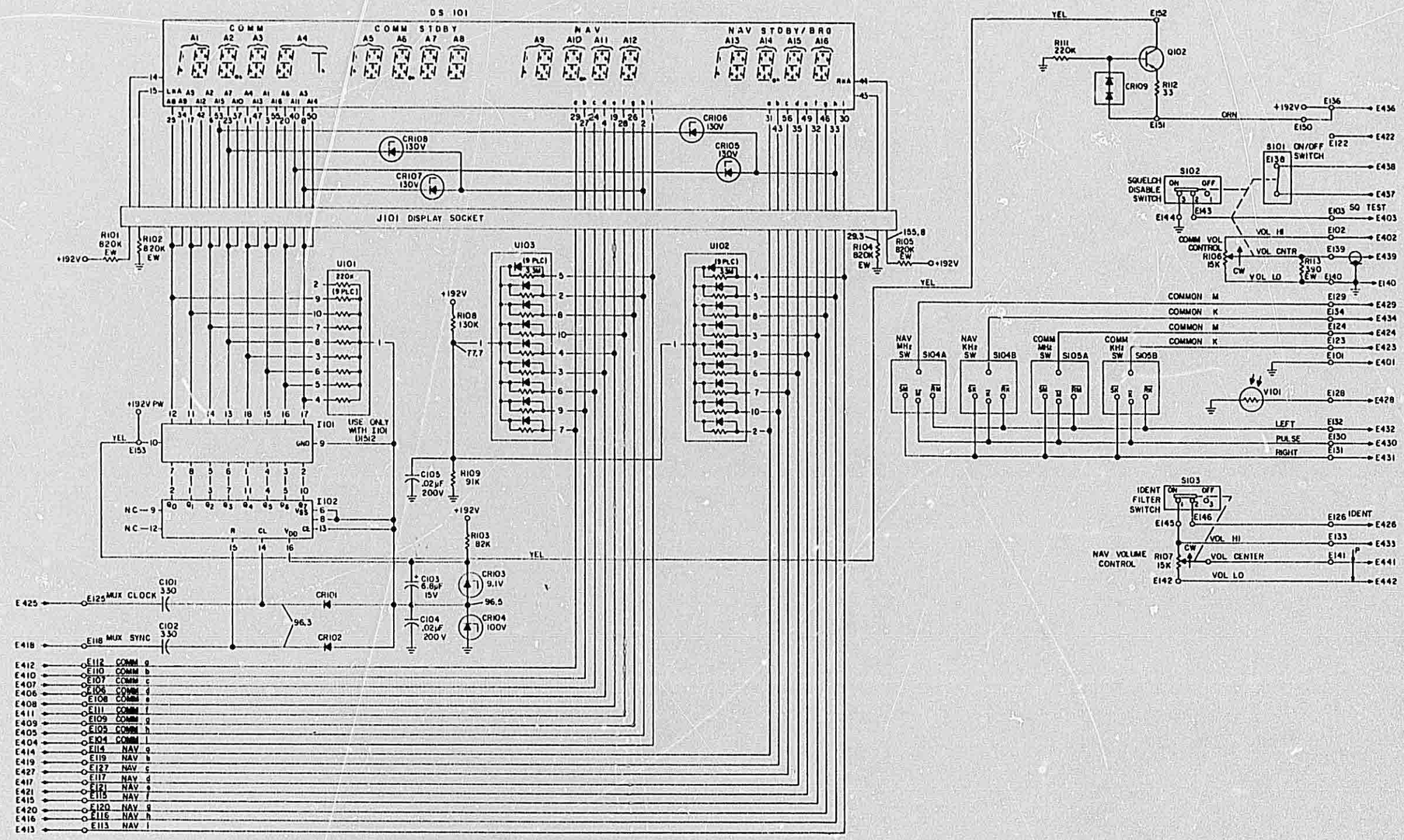
DS 101
COMM
COMM STDBY
NAV
NAV STDBY/BRG
J101 DISPLAY SOCKET
U101
U103
U102
I101
I102
+192V
+192V PW
R101 820K EW
R102 820K EW
R108 130K
R109 91K
R103 82K
R104 820K EW
R105 820K EW
C105 .02µF 200V
C103 6.8µF 15V
C104 .02µF 200V
C101 330
C102 330
CR101
CR102
CR103 9.1V
CR104 100V
CR105 130V
CR106 130V
CR107 130V
CR108 130V
MUX CLOCK
MUX SYNC
USE ONLY WITH I101 UH342
Q102
R111 220K
R112 33
CR109
S101 ON/OFF SWITCH
S102 SQUELCH DISABLE SWITCH
COMM VOL CONTROL R106 15K
VOL HI
VOL CNTR
VOL LO
SQ TEST
COMMON M
COMMON K
NAV MHz SW
NAV KHz SW
COMM MHz SW
COMM KHz SW
S104A
S104B
S105A
S105B
V101
LEFT
PULSE
RIGHT
S103 IDENT FILTER SWITCH
IDENT
NAV VOLUME CONTROL R107 15K
VOL CENTER
YEL
ORN

EMATIC
1)

FIGURE 6-12 DISPLAY BOARD SCHEMATIC
(Dwg. No. 002-06068-0000, R-12)

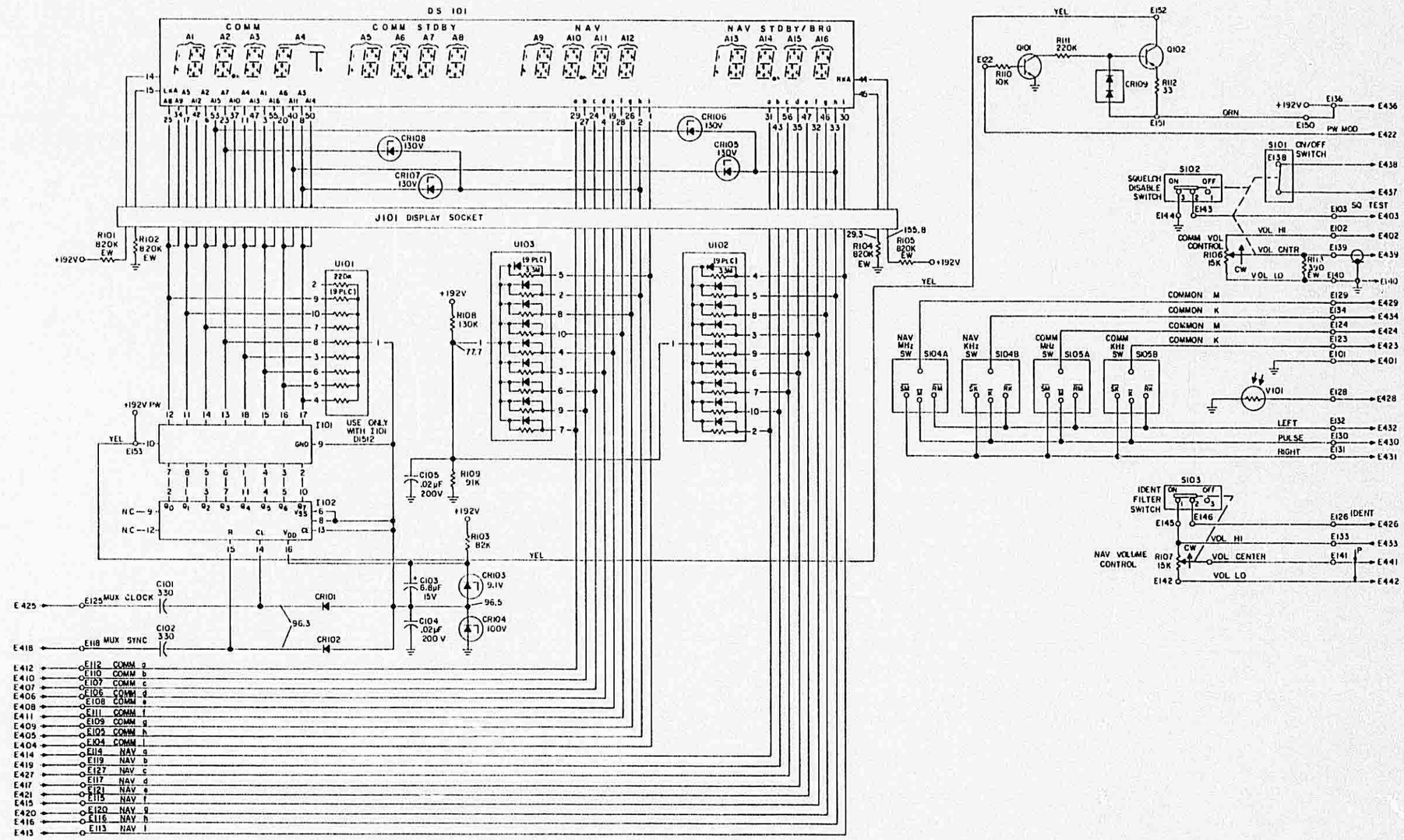
DS 101
COMM
COMM STDBY
NAV
NAV STDBY/BRG
J101 DISPLAY SOCKET
U101
U102
U103
I101
I102
USE ONLY WITH I101
MUX CLOCK
MUX SYNC
Q101
Q102
S101 ON/OFF SWITCH
S102 SQUELCH DISABLE SWITCH
SQ TEST
COMM VOL CONTROL R106 15K
VOL HI
VOL CNTR
VOL LO
COMMON M
COMMON K
NAV MHz SW S104A
NAV KHz SW S104B
COMM MHz SW S105A
COMM KHz SW S105B
V101
LEFT
PULSE
RIGHT
S103 IDENT FILTER SWITCH
IDENT
NAV VOLUME CONTROL R107 15K
VOL CENTER
PW MOD
+192V
YEL
GRN

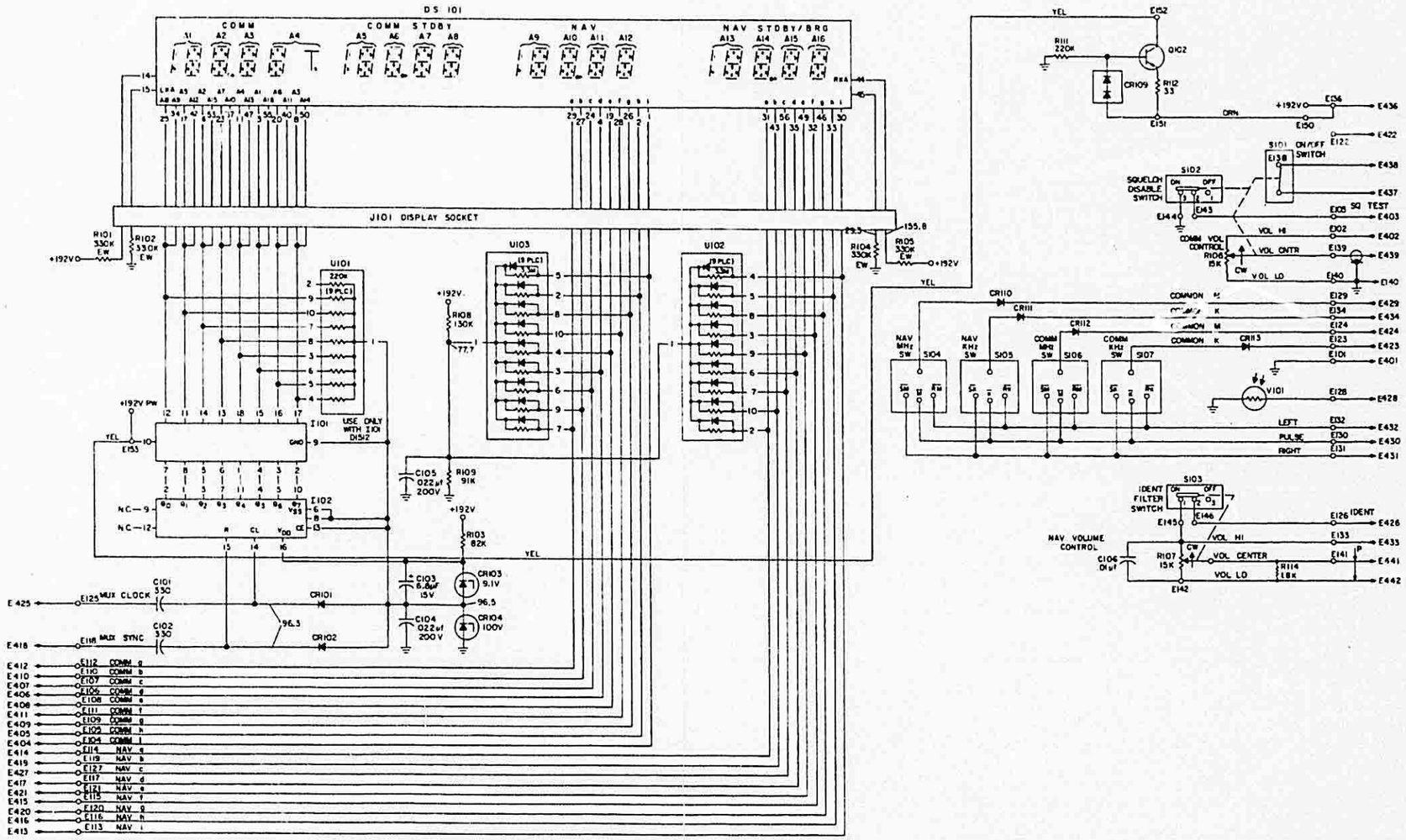

FIGURE 6-13D Display Board Schematic
(Dwg. No. 002-06068-0010, Rev. AA, sheet 1 of 2)

FIGURE 6-13C DISPLAY BOARD SCHEMATIC
(Dwg. No. 002-06068-0010, R-7)

ER

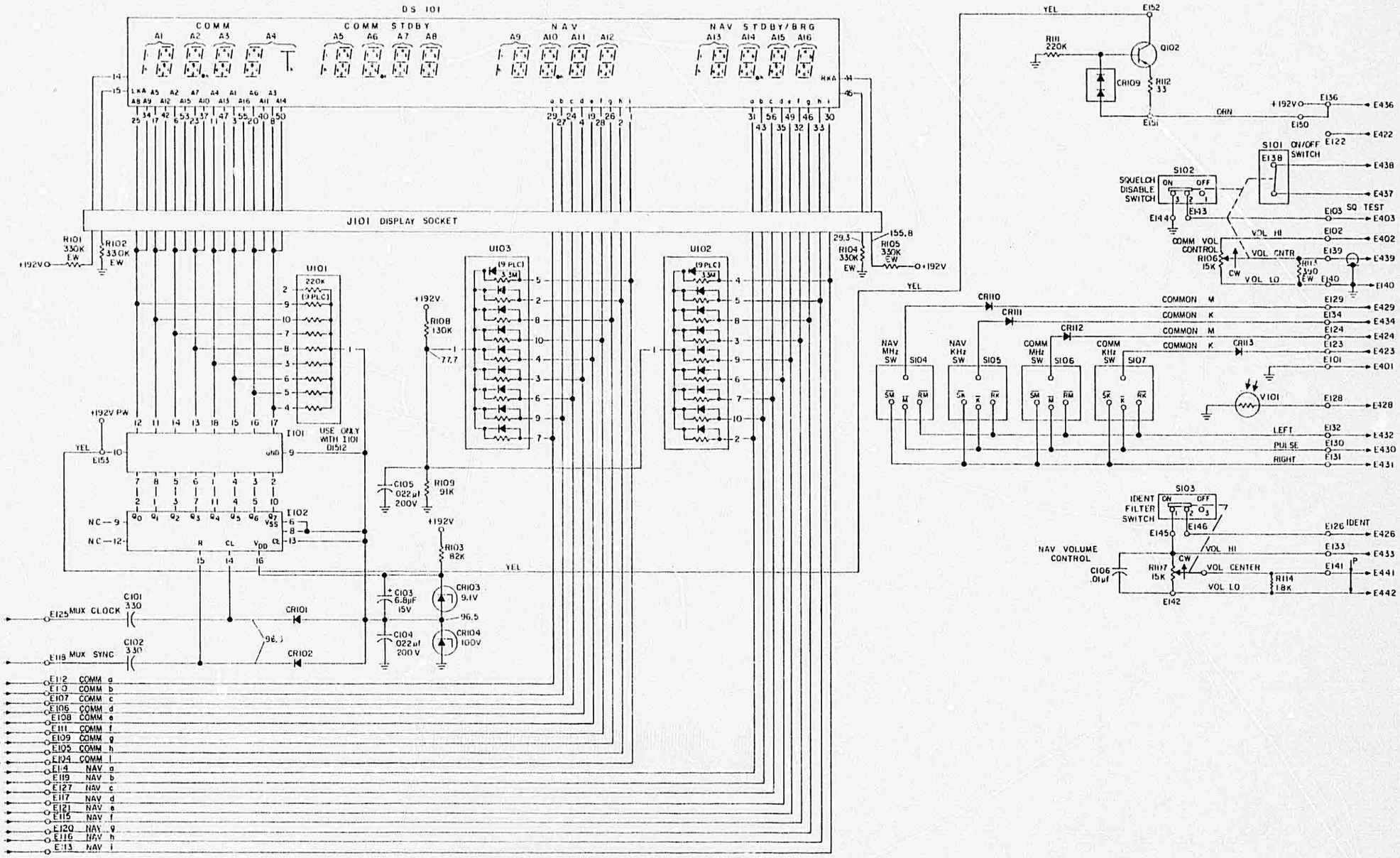
DS 101
COMM
COMM STDBY
NAV
NAV STDBY/BRG
J101 DISPLAY SOCKET
U101
U103
U102
I101
I102
USE ONLY WITH I101 DI512
MUX CLOCK
MUX SYNC
COMM a
COMM b
COMM c
COMM d
COMM e
COMM f
COMM g
COMM h
COMM i
NAV a
NAV b
NAV c
NAV d
NAV e
NAV f
NAV g
NAV h
NAV i
Q102
CR109
S101 ON/OFF SWITCH
S102
SQUELCH DISABLE SWITCH
SQ TEST
COMM VOL CONTROL
VOL HI
VOL CNTR
VOL LO
COMMON M
COMMON K
NAV MHz SW
NAV KHz SW
COMM MHz SW
COMM KHz SW
V101
LEFT
PULSE
RIGHT
S103
IDENT FILTER SWITCH
IDENT
NAV VOLUME CONTROL
VOL HI
VOL CENTER
VOL LO

EMATIC

FIGURE 6-13B DISPLAY BOARD SCHEMATIC
(Dwg. No. 002-06068-0010, R-6)

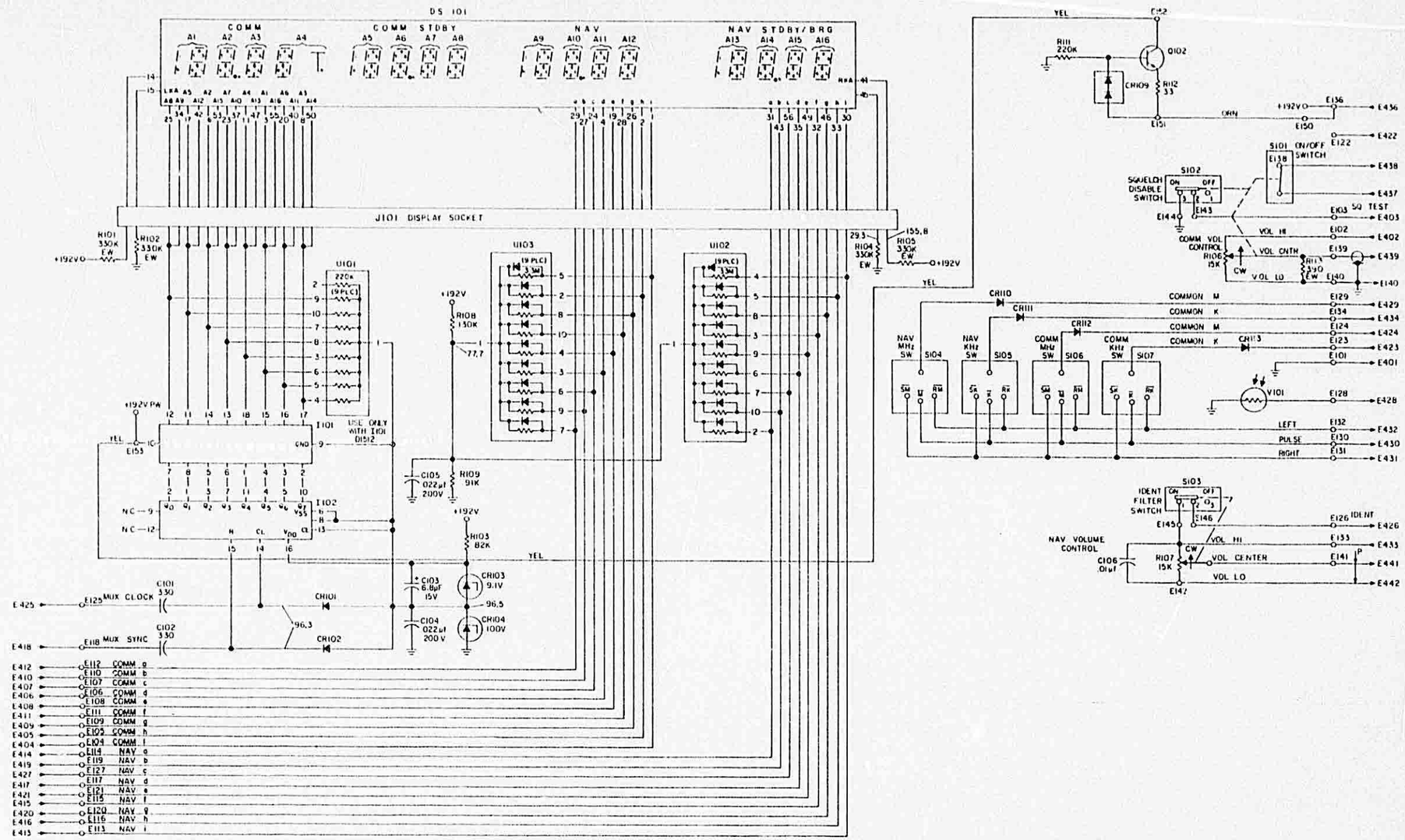
DS 101
COMM
COMM STDBY
NAV
NAV STDBY/BRG
J101 DISPLAY SOCKET
U101
U103
U102
I101
I102
Q102
S101 ON/OFF SWITCH
S102 SQUELCH DISABLE SWITCH
SQ TEST
COMM VOL CONTROL
VOL HI
VOL CNTR
VOL LO
COMMON M
COMMON K
NAV MHz SW
NAV KHz SW
COMM MHz SW
COMM KHz SW
V101
LEFT
PULSE
RIGHT
S103 IDENT FILTER SWITCH
IDENT
NAV VOLUME CONTROL
VOL CENTER
MUX CLOCK
MUX SYNC
COMM a
COMM b
COMM c
COMM d
COMM e
COMM f
COMM g
COMM h
COMM i
NAV a
NAV b
NAV c
NAV d
NAV e
NAV f
NAV g
NAV h
NAV i

FIGURE 6-13A DISPLAY BOARD SCHEMATIC
(Dwg. No. 002-06068-0010, R-5)

ER

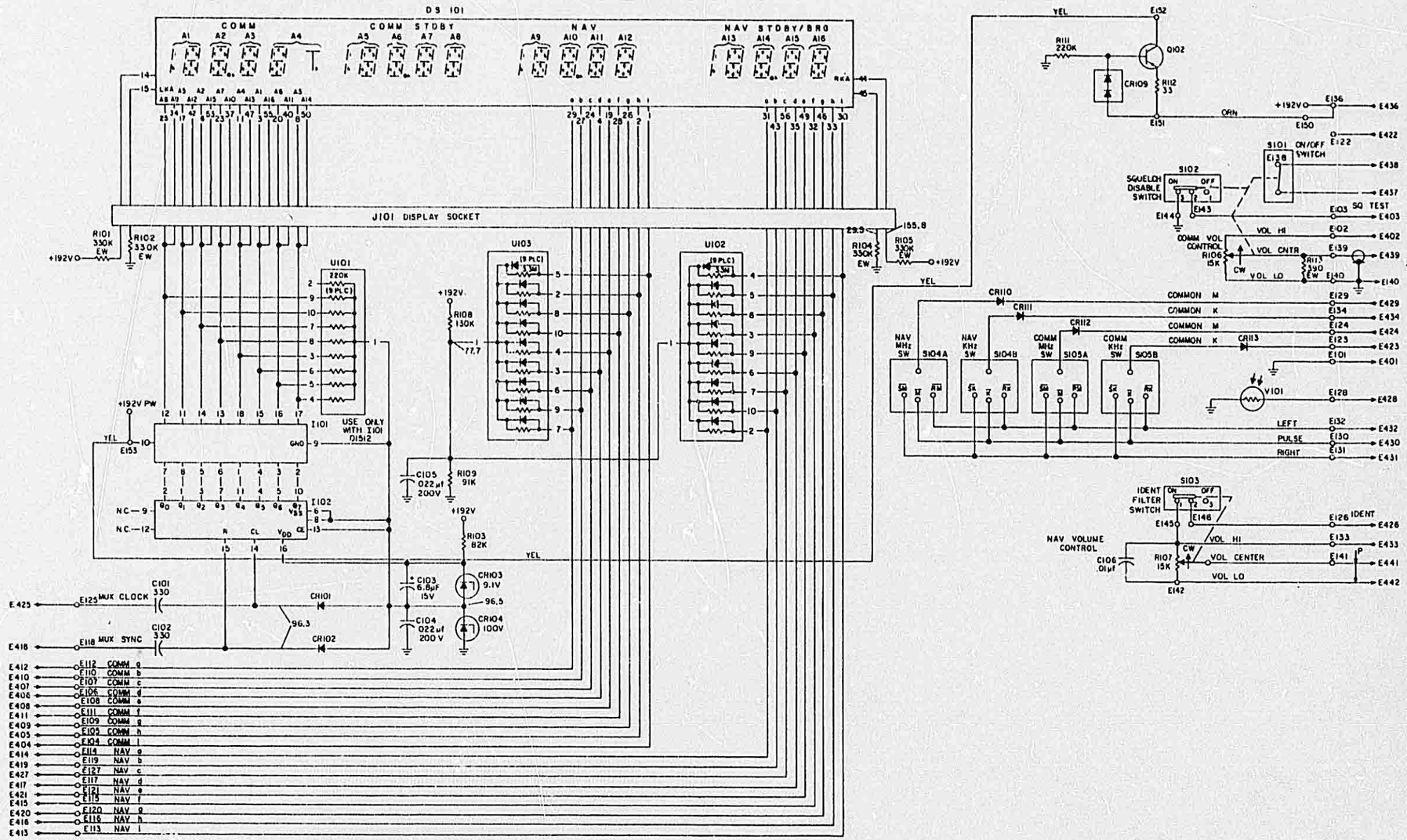
DS 101
COMM
COMM STDBY
NAV
NAV STDBY/BRG
J101 DISPLAY SOCKET
U101
U102
U103
I101
I102
USE ONLY WITH I101 D1512
MUX CLOCK
MUX SYNC
Q102
CR109
S101 ON/OFF SWITCH
S102 SQUELCH DISABLE SWITCH
SQ TEST
COMM VOL CONTROL
VOL HI
VOL CNTR
VOL LO
COMMON M
COMMON K
NAV MHz SW
NAV KHz SW
COMM MHz SW
COMM KHz SW
S104A
S104B
S105A
S105B
V101
LEFT
PULSE
RIGHT
S103 IDENT FILTER SWITCH
IDENT
NAV VOLUME CONTROL
VOL CENTER
+192V
YEL
ORN

200-06070-0000	RCVR 28V	Rev 60
200-06070-0001	RCVR 28V 50K SEL	Rev 60
200-06070-0010	RECEIVER 28V	Rev 61
200-06070-0011	RCVR 28V 50K SEL	Rev 58
200-06070-0020	ICAO RCVR 28V	Rev AC
200-06070-0021	ICAO RCVR 28V	Rev AB

SYMBOL	CAS PART NBR	DESCRIPTION	[UOM]	-0000	-0001	-0010	-0011	-0020	-0021
-	008-00038-0001	TERM BIFUR .084L	[EA]	1	1	1	1	1	1
-	009-06070-0000	PC BD RCVR 28V	[EA]	1	1	.	.	.	.
-	009-06070-0010	PC BD RECEIVER 28V	[EA]	.	.	1	1	.	.
-	009-06070-0020	PCBD ICAO RCVR 28V	[EA]	.		.	.	1	1
-	010-00019-0095	TERM STDF WHT	[EA]	.		1	1	.	.
-	012-01005-0003	TAPE MYLAR .250 W	[IN]	.		.	.	0.5	0.5
-	012-01159-0000	INSUL SHLD	[EA]	1	1	1	1	1	1
-	012-01160-0000	INSUL SHLD	[EA]	1	1	1	1	.	.
-	012-01172-0000	INSUL SHLD	[EA]	1	1	1	1	1	1
-	012-01174-0000	INSULATOR	[EA]	4	4	4	4	4	4
-	012-01183-0000	INSUL PSLTR SHLD 3	[EA]	1	1	1	1	.	.
-	012-01184-0000	INSUL PSLTR SHLD 2	[EA]	1	1	1	1	.	.
-	012-01199-0000	INSULATOR SHIELD	[EA]	1	1	1	1	.	.
-	012-01479-0000	INSUL SHIELD	[EA]	.		1	1	1	1
-	016-01040-0000	COATING TYPE AR	[AR]	0	0	0	0	.	.
-	016-01082-0000	DC RTV 3145	[AR]	.		.	.	1	1
-	025-00001-0005	WIRE 26 GRN	[IN]	.		.	.	1	1
-	026-00002-0000	WIRE CU 24AWG TINNE	[IN]	.		.	.	1	1
-	026-00013-0000	WIRE COAX RG-178B/U	[IN]	6.6	6.6	6.6	6.6	9.449	9.449
-	026-00032-0008	WIRE CU 28AWG SGL	[IN]	.		.	.	1.75	1.75
-	030-02174-0001	PIN CONT	[EA]	.		1	1	.	.
-	047-04977-0003	FNGR STOCK .625	[EA]	.		.	.	1	1
-	047-04977-0013	FNGR STOCK .165	[EA]	1	1	.	1	1	1
-	047-04977-0014	ENG STOCK .165	[EA]	.		1	.	.	.
-	047-05022-0001	SHIELD W/F	[EA]	1	1	1	1	1	1
-	047-05023-0001	SHIELD W/F	[EA]	1	1	1	1	.	.
-	047-05214-0001	PRESEL SHLD	[EA]	1	1	1	1	1	1
-	047-05420-0001	SHLD P/SLTR #2 W/F	[EA]	1	1	1	1	.	.
-	047-05420-0002	SHLD P/SLTR #2 W/F	[EA]	.		.	.	1	.
-	047-05484-0001	SHLD P/SLCTR #3	[EA]	1	1	1	1	.	.
-	047-05484-0002	SHLD P/SLCTR #3	[EA]	.		.	.	1	.
-	047-05635-0003	FENCE W/F	[EA]	1	1	1	1	1	1
-	047-05636-0001	COVER FENCE W/F	[EA]	1	1	1	1	1	1
-	047-05638-0001	SHIELD W/F	[EA]	1	1	1	1	.	.
-	047-05638-0002	SHIELD W/F	[EA]	.	.	.	.	1	.

SYMBOL	CAS PART NBR	DESCRIPTION	[UOM]	-0000	-0001	-0010	-0011	-0020	-0021
-	047-10418-0001	COVER NAV FRT END	[EA]	.	.	.	.	1	1
-	047-10419-0001	COVER NAV MIXER	[EA]	.	.	.	.	1	1
-	047-10420-0001	COVER NAV IF	[EA]	.	.	.	.	1	1
-	047-10421-0002	SHIELD NAV IF	[EA]	.	.	.	.	1	1
-	047-10422-0002	SHIELD NAV VCO	[EA]	.	.	.	.	1	1
-	047-10423-0001	CPVER. NAV VCO	[EA]	.	.	.	.	1	1
-	047-10428-0002	SINGAPORE	[EA]	.	.	.	.	.	1
-	047-10429-0002	SHIELD A	[EA]	.	.	.	.	.	1
-	089-06004-0003	SCR FHP 2-56X3/16	[EA]	4	4	4	4	4	4
-	090-00133-0001	HEATSINK .323 LG	[EA]	.	.	.	.	1	1
-	090-00307-0000	HEAT SINK FOR TO-5	[EA]	.		1	1	1	1
-	091-00025-0000	WSHR XSTR INSUL	[EA]	1	1	1	1	1	1
-	091-00028-0009	SCR BHS 4-40X.112	[EA]	.	.	.	.	1	1
-	091-00052-0000	INSUL WASHER	[EA]	.	.	.	.	1	1
-	091-00155-0000	WASHER MICA	[EA]	.	.	.	.	1	1
-	150-00003-0010	TUBING TFLN 24AWG	[IN]	.	.	0.2	0.2	.	.
-	150-00004-0010	TUBING TFLN 22AWG	[IN]	.	.	.	.	0.25	0.25
-	150-00103-0000	SLDR SLEEVE	[EA]	2	2	2	2	4	4
-	187-01018-0000	CUSHION RELAY	[EA]	.	.	1	1	1	1
-	200-08506-0000	PC BOARD	[EA]	.	.	2	2	.	.
-	200-08506-0004	PC BOARD	[EA]	.	.	2	2	.	.
-	200-09292-0000	KX155 RX PIG BD.	[EA]	.	.	.	.	1	1
C 200	106-04221-0026	CAP CH220PFNPO/100	[EA]	.	.	.	.	1	1
C 200	113-03221-0000	CAP DC 220PF 500V	[EA]	1	1	1	1	.	.
C 201	096-01186-0032	CAP 2.2UF 35V 10%	[EA]	.	.	.	.	1	1
C 201	097-00104-0004	CAP AL 2.2UF 50V	[EA]	1	1	1	1	.	.
C 202	113-03047-0000	CAP DC 4.7PF 500V	[EA]	1	1	.	.	.	.
C 203	106-04479-0020	CAP CH 4.7 NPO/100	[EA]	.	.	.	.	1	1
C 203	113-03047-0000	CAP DC 4.7PF 500V	[EA]	1	1	1	1	.	.
C 204	106-04100-0026	CAPCH 10PFNPO/100VV	[EA]	.	.	.	.	1	1
C 204	113-03039-0000	CAP DC 3.9PF 500V	[EA]	.	.	1	1	.	.
C 204	113-03047-0000	CAP DC 4.7PF 500V	[EA]	1	1	.	.	.	.
C 205	106-04330-0026	CH 33PF NPO/100V	[EA]	.	.	.	.	1	1
C 205	111-02101-0011	CAP MC 100PF50V10%	[EA]	1	1	1	1	.	.
C 206	106-04101-0026	CH 100PF NPO/100V	[EA]	.	.	.	.	1	1
C 206	111-02101-0011	CAP MC 100PF50V10%	[EA]	1	1	1	1	.	.
C 207	106-04569-0020	CAP CH 5.6 NPO/100	[EA]	.	.	.	.	1	1
C 207	113-03056-0000	CAP DC 5.6PF 500V	[EA]	.	.	1	1	.	.
C 207	113-05033-0000	CAP DC 3.3PF 500V	[EA]	1	1	.	.	.	.
C 208	106-04271-0026	CAPCH270PFNPO/100V	[EA]	.	.	.	.	1	1
C 208	113-03221-0000	CAP DC 220PF 500V	[EA]	1	1	.	.	.	.
C 208	113-05271-0000	CAP DC 270PF 500V	[EA]	.	.	1	1	.	.

SYMBOL	CAS PART NBR	DESCRIPTION	[UOM]	-0000	-0001	-0010	-0011	-0020	-0021
C 209	106-04473-0047	CAP CH 47K X7R/50V	[EA]	.	.	.	.	1	1
C 209	111-00001-0012	CAP CR .047UF 50V	[EA]	1	1	1	1	.	.
C 210	106-04221-0026	CAP CH220PFNPO/100	[EA]	.	.	.	.	1	1
C 210	113-03221-0000	CAP DC 220PF 500V	[EA]	1	1	1	1	.	.
C 211	106-04101-0026	CH 100PF NPO/100V	[EA]	.	.	.	.	1	1
C 211	111-00001-0008	CAP CR 100PF 200V	[EA]	1	1	1	1	.	.
C 212	106-04102-0026	CH 1KPF NPO/100V	[EA]	.	.	.	.	1	1
C 212	111-00001-0035	CAP CR 1000PF 50V	[EA]	.	.	1	1	.	.
C 212	113-05102-0000	CAP DC .001UF 500V	[EA]	1	1	.	.	.	.
C 213	106-04181-0026	CAPCH180PFNPO/100V	[EA]	.	.	.	.	1	1
C 213	111-00001-0017	CAP CR 180PF 50V	[EA]	1	1	1	1	.	.
C 214	106-04100-0026	CAPCH 10PFNPO/100VV	[EA]	.	.	.	.	1	1
C 214	113-03068-0000	CAP DC 6.8PF 500V	[EA]	1	1	.	.	.	.
C 214	113-03100-0000	CAP DC 10PF 500V	[EA]	.	.	1	1	.	.
C 215	106-04479-0020	CAP CH 4.7 NPO/100	[EA]	.	.	.	0.33	1	1
C 215	113-03047-0000	CAP DC 4.7PF 500V	[EA]	.	.	0.33	0.33	.	.
C 215	113-03056-0000	CAP DC 5.6PF 500V	[EA]	1	1	0.33	0.33	.	.
C 215	113-03068-0000	CAP DC 6.8PF 500V	[EA]	.	.	0.33	0.33	.	.
C 216	106-04331-0026	CAPCH330PFNPO/100V	[EA]	.	.	.	.	1	1
C 216	111-00001-0084	CAP CR 330PF 50V	[EA]	1	1	1	1	.	.
C 217	106-04331-0026	CAPCH330PFNPO/100V	[EA]	.	.	.	.	1	1
C 217	111-00001-0084	CAP CR 330PF 50V	[EA]	1	1	1	1	.	.
C 218	106-04221-0026	CAP CH220PFNPO/100	[EA]	.	.	.	.	1	1
C 218	113-03221-0000	CAP DC 220PF 500V	[EA]	1	1	1	1	.	.
C 219	113-03100-0000	CAP DC 10PF 500V	[EA]	1	1	.	.	.	.
C 220	096-01082-0042	CAP TN 33UF 15V	[EA]	.	.	1	1	.	.
C 220	096-01186-0015	CAP 33UF 16V 10%	[EA]	.	.	.	.	1	1
C 220	097-00104-0036	CAP AL 47UF 25V	[EA]	1	1	.	.	.	.
C 221	106-04121-0026	CAPCH120PFNPO/100V	[EA]	.	.	.	.	1	1
C 221	113-03121-0000	CAP DC 120PF 500V	[EA]	1	1	1	1	.	.
C 223	106-04221-0026	CAP CH220PFNPO/100	[EA]	.	.	.	.	1	1
C 223	113-03221-0000	CAP DC 220PF 500V	[EA]	1	1	1	1	.	.
C 224	106-04221-0026	CAP CH220PFNPO/100	[EA]	.	.	.	.	1	1
C 224	113-03221-0000	CAP DC 220PF 500V	[EA]	1	1	1	1	.	.
C 225	106-04563-0046	CAP CH 56K X7R/50V	[EA]	.	.	.	.	1	1
C 225	109-00007-0003	CAP DC .05UF 25V	[EA]	1	1	1	1	.	.
C 226	096-01186-0036	CAP 10UF 35V 10%	[EA]	.	.	.	.	1	1
C 226	097-00104-0015	CAP AL 10UF 50V	[EA]	1	1	1	1	.	.
C 227	106-04563-0046	CAP CH 56K X7R/50V	[EA]	.	.	.	.	1	1
C 227	109-00007-0003	CAP DC .05UF 25V	[EA]	1	1	1	1	.	.
C 228	106-00001-0015	CAP FC .56PF10%500	[EA]	1	.	1	.	.	.
C 228	106-00146-0R5B	CAP PORC AXIAL 0.5PF	[EA]	.	.	.	.	1	.

SYMBOL	CAS PART NBR	DESCRIPTION	[UOM]	-0000	-0001	-0010	-0011	-0020	-0021
C 229	106-00001-0015	CAP FC .56PF10%500	[EA]	1	.	1	.	.	.
C 229	106-00146-0R5B	CAP PORC AXIAL 0.5PF	[EA]	.	.	.	.	1	.
C 230	106-00001-0015	CAP FC .56PF10%500	[EA]	1	.	1	.	.	.
C 230	106-00146-0R5B	CAP PORC AXIAL 0.5PF	[EA]	.	.	.	.	1	.
C 231	106-04104-0046	CAP CH.1UFX7R50V	[EA]	.	.	.	.	1	1
C 231	114-07104-0000	CAP DC .1UF 16V	[EA]	1	1	1	1	.	.
C 232	096-01082-0045	CAP TN 2.2UF 35V	[EA]	1	1	1	1	.	.
C 232	096-01186-0032	CAP 2.2UF 35V 10%	[EA]	.	.		.	1	1
C 233	106-04563-0046	CAP CH 56K X7R/50V	[EA]	.	.	.	.	1	1
C 233	109-00007-0003	CAP DC .05UF 25V	[EA]	1	1	1	1	.	.
C 234	106-04563-0046	CAP CH 56K X7R/50V	[EA]	.	.	.	.	1	1
C 234	109-00007-0003	CAP DC .05UF 25V	[EA]	1	1	1	1	.	.
C 235	096-01082-0005	CAP TN 10UF 20V	[EA]	1	1	1	1	.	.
C 235	096-01186-0036	CAP 10UF 35V 10%	[EA]	.	.	.	.	1	1
C 236	106-04563-0046	CAP CH 56K X7R/50V	[EA]	.	.	.	.	1	1
C 236	109-00007-0003	CAP DC .05UF 25V	[EA]	1	1	1	1	.	.
C 237	106-04563-0046	CAP CH 56K X7R/50V	[EA]	.	.	.	.	1	1
C 237	109-00007-0003	CAP DC .05UF 25V	[EA]	1	1	1	1	.	.
C 238	097-00104-0036	CAP AL 47UF 25V	[EA]	1	1	1	1	1	1
C 239	106-04563-0046	CAP CH 56K X7R/50V	[EA]	.	.	.	.	1	1
C 239	109-00007-0003	CAP DC .05UF 25V	[EA]	1	1	1	1	.	.
C 240	106-04392-0057	CAPCH3900PFX7R/100	[EA]	.	.	.	.	1	1
C 240	111-00001-0010	CAP CR .0039UF 50V	[EA]	1	1	1	1	.	.
C 241	096-01186-0036	CAP 10UF 35V 10%	[EA]	.	.	.	.	1	1
C 241	097-00104-0015	CAP AL 10UF 50V	[EA]	1	1	1	1	.	.
C 242	096-01082-0002	CAP TN 1UF 35V	[EA]	1	1	1	1	.	.
C 242	096-01186-0080	CAP 1.0UF 35V 20%	[EA]	.	.	.	.	1	1
C 243	106-04104-0046	CAP CH.1UFX7R50V	[EA]	.	.	.	.	1	1
C 243	114-07104-0000	CAP DC .1UF 16V	[EA]	1	1	1	1	.	.
C 244	096-01082-0051	CAP TN .15UF 20V	[EA]	1	1	1	1	.	.
C 244	106-04154-0078	CAP CH 150KZ5U/50V	[EA]	.	.	.	.	1	1
C 245	096-01082-0013	CAP TN .33UF 20V	[EA]	1	1	1	1	.	.
C 245	096-01186-0027	CAP .33UF 35V 10%	[EA]	.	.	.	.	1	1
C 246	111-00001-0012	CAP CR .047UF 50V	[EA]	1	1	1	1	1	1
C 247	096-01082-0051	CAP TN .15UF 20V	[EA]	1	1	1	1	.	.
C 247	106-04154-0078	CAP CH 150KZ5U/50V	[EA]	.	.	.	.	1	1
C 248	096-01186-0034	CAP 4.7UF 35V 10%	[EA]	.	.	.	.	1	1
C 248	097-00104-0010	CAP AL 4.7UF 50V	[EA]	1	1	1	1	.	.
C 249	106-04473-0047	CAP CH 47K X7R/50V	[EA]	.	.	.	.	1	1
C 249	111-00001-0012	CAP CR .047UF 50V	[EA]	1	1	1	1	.	.
C 250	106-04473-0047	CAP CH 47K X7R/50V	[EA]	.	.	.	.	1	1
C 250	111-00001-0012	CAP CR .047UF 50V	[EA]	1	1	1	1	.	.

SYMBOL	CAS PART NBR	DESCRIPTION	[UOM]	-0000	-0001	-0010	-0011	-0020	-0021
C 251	106-04102-0026	CH 1KPF NPO/100V	[EA]	.	.	.	.	1	1
C 251	113-05102-0000	CAP DC .001UF 500V	[EA]	1	1	1	1	.	.
C 252	106-04102-0026	CH 1KPF NPO/100V	[EA]	.	.	.	.	1	1
C 252	113-05102-0000	CAP DC .001UF 500V	[EA]	1	1	1	1	.	.
C 253	106-04223-0046	CAP CH 22K X7R/50V	[EA]	.	.	.	.	1	1
C 253	109-00007-0001	CAP DC .022UF 25V	[EA]	1	1	1	1	.	.
C 254	106-04473-0047	CAP CH 47K X7R/50V	[EA]	.	.	.	.	1	1
C 254	111-00001-0012	CAP CR .047UF 50V	[EA]	1	1	1	1	.	.
C 255	106-04104-0046	CAP CH.1UFX7R50V	[EA]	.	.	.	.	1	1
C 255	111-00001-0001	CAP CR .1UF 50V	[EA]	1	1	1	1	.	.
C 256	106-04682-0046	CAP CH 6.8K 50V 5%	[EA]	.	.	.	.	1	1
C 256	111-00001-0005	CAP CR .0068UF 50V	[EA]	1	1	1	1	.	.
C 257	106-04104-0046	CAP CH.1UFX7R50V	[EA]	.	.	.	.	1	1
C 257	111-00001-0001	CAP CR .1UF 50V	[EA]	1	1	1	1	.	.
C 258	096-01082-0005	CAP TN 10UF 20V	[EA]	.	.	1	1	.	.
C 258	096-01186-0036	CAP 10UF 35V 10%	[EA]	.	.	.	.	1	1
C 258	097-00104-0015	CAP AL 10UF 50V	[EA]	1	1	.	.	.	.
C 259	106-04473-0047	CAP CH 47K X7R/50V	[EA]	.	.	.	.	1	1
C 259	111-00001-0011	CAP CR .047UF 50V	[EA]	1	1	1	1	.	.
C 260	106-04569-0020	CAP CH 5.6 NPO/100	[EA]	.	.	.	.	1	1
C 260	111-00001-0054	CAP CR 5.6PF 100V	[EA]	.	.	1	1	.	.
C 260	113-03039-0000	CAP DC 3.9PF 500V	[EA]	1	1	.	.	.	.
C 261	096-01082-0037	CAP TN 68UF 10V	[EA]	.	.	1	1	1	1
C 261	097-00104-0036	CAP AL 47UF 25V	[EA]	1	1	.	.	.	.
C 262	106-04103-0046	CAP CH 10K X7R/50V	[EA]	.	.	.	.	1	1
C 262	109-00007-0000	CAP DC .01UF 25V	[EA]	1	1	1	1	.	.
C 263	104-00001-0026	CAP SM 82PF 100V	[EA]	1	1	.	.	.	.
C 263	106-04820-0026	CAP CH82PFNPO/100V	[EA]	.	.	.	.	1	1
C 263	111-02820-0020	CAP MC 82PF100V 5%	[EA]	.	.	1	1	.	.
C 264	106-04223-0046	CAP CH 22K X7R/50V	[EA]	.	.	.	.	1	1
C 264	111-00001-0007	CAP CR .022UF 50V	[EA]	1	1	1	1	.	.
C 265	096-01082-0011	CAP TN 4.7UF 20V	[EA]	1	1	1	1	.	.
C 265	096-01186-0034	CAP 4.7UF 35V 10%	[EA]	.	.	.	.	1	1
C 266	106-04820-0026	CAP CH82PFNPO/100V	[EA]	.	.	.	.	1	1
C 266	113-03820-0000	CAP DC 82PF 500V	[EA]	1	1	1	1	.	.
C 267	106-04473-0047	CAP CH 47K X7R/50V	[EA]	.	.	.	.	1	1
C 267	111-00001-0012	CAP CR .047UF 50V	[EA]	1	1	1	1	.	.
C 268	106-04330-0026	CH 33PF NPO/100V	[EA]	.	.	.	.	1	1
C 268	113-03221-0000	CAP DC 220PF 500V	[EA]	1	1	.	.	.	.
C 268	113-03330-0000	CAP DC 33PF 500V	[EA]	.	.	1	1	.	.
C 269	106-04100-0026	CAPCH 10PFNPO/100VV	[EA]	.	.	.	.	1	1
C 269	113-05330-0000	CAP DC 33PF 1KV	[EA]	1	1	1	1	.	.

SYMBOL	CAS PART NBR	DESCRIPTION	[UOM]	-0000	-0001	-0010	-0011	-0020	-0021
C 270	106-04331-0026	CAPCH330PFNPO/100V	[EA]	.	.	.	.	1	1
C 270	113-05331-0000	CAP DC 330PF 500V	[EA]	1	1	1	1	.	.
C 271	106-04100-0026	CAPCH 10PFNPO/100VV	[EA]	.	.	.	.	1	1
C 271	113-03100-0000	CAP DC 10PF 500V	[EA]	.	.	1	1	.	.
C 271	113-03150-0000	CAP DC 15PF 500V	[EA]	1	1	.	.	.	.
C 272	106-04331-0026	CAPCH330PFNPO/100V	[EA]	.	.	.	.	1	1
C 272	113-05331-0000	CAP DC 330PF 500V	[EA]	1	1	1	1	.	.
C 273	106-04121-0026	CAPCH120PFNPO/100V	[EA]	.	.	.	.	1	1
C 273	113-03121-0000	CAP DC 120PF 500V	[EA]	1	1	1	1	.	.
C 274	096-01082-0037	CAP TN 68UF 10V	[EA]	.	.	1	1	1	1
C 274	113-05331-0000	CAP DC 330PF 500V	[EA]	1	1	.	.	.	.
C 275	106-04470-0026	CAPCH 47PFNPO/100V	[EA]	.	.	.	.	1	1
C 275	113-05470-0000	CAP DC 47PF 500V	[EA]	1	1	1	1	.	.
C 276	106-04569-0020	CAP CH 5.6 NPO/100	[EA]	.	.	.	.	1	1
C 276	113-03056-0000	CAP DC 5.6PF 500V	[EA]	1	1	1	1	.	.
C 277	097-00104-0020	CAP AL 22UF 25V	[EA]	1	1	.	.	.	.
C 278	111-00001-0012	CAP CR .047UF 50V	[EA]	1	1	1	1	.	.
C 279	111-00001-0012	CAP CR .047UF 50V	[EA]	1	1	1	1	.	.
C 280	106-04473-0047	CAP CH 47K X7R/50V	[EA]	.	.	.	.	1	1
C 280	111-00001-0012	CAP CR .047UF 50V	[EA]	1	1	1	1	.	.
C 282	106-04100-0026	CAPCH 10PFNPO/100VV	[EA]	.	.	.	.	1	1
C 282	111-00001-0061	CAP CR 10PF 100V	[EA]	.	.	1	1	.	.
C 282	113-03180-0000	CAP DC 18PF 500V	[EA]	1	1	.	.	.	.
C 283	096-01186-0036	CAP 10UF 35V 10%	[EA]	.	.	.	.	1	1
C 283	097-00104-0015	CAP AL 10UF 50V	[EA]	1	1	1	1	.	.
C 284	096-01186-0036	CAP 10UF 35V 10%	[EA]	.	.	.	.	1	1
C 284	097-00104-0015	CAP AL 10UF 50V	[EA]	1	1	1	1	.	.
C 301	106-04120-0026	CAPCH 12PFNPO/100V	[EA]	.	.	.	.	1	1
C 301	113-03120-0000	CAP DC 12PF 500V	[EA]	1	1	1	1	.	.
C 302	106-04010-0020	CAP CH 1PF NPO/100	[EA]	.	.	.	.	1	1
C 302	111-02680-0020	CAP MC 68PF100V 5%	[EA]	1	1	1	1	.	.
C 303	106-00001-0013	CAP FC 1.2PF5%500V	[EA]	1	1	1	1	.	.
C 303	106-00146-1R5J	CAP PORC AXIAL 1.5PF	[EA]	.	.	.	.	1	1
C 304	106-04010-0020	CAP CH 1PF NPO/100	[EA]	.	.	.	.	1	1
C 304	111-02680-0020	CAP MC 68PF100V 5%	[EA]	1	1	1	1	.	.
C 306	106-04121-0026	CAPCH120PFNPO/100V	[EA]	.	.	.	.	1	1
C 306	113-05102-0000	CAP DC .001UF 500V	[EA]	1	1	1	1	.	.
C 307	113-05331-0000	CAP DC 330PF 500V	[EA]	1	1	1	1	.	.
C 308	106-04689-0020	CAP CH 6.8 NPO/100	[EA]	.	.	.	.	1	1
C 308	113-03121-0000	CAP DC 120PF 500V	[EA]	.	.	1	1	.	.
C 308	113-03820-0000	CAP DC 82PF 500V	[EA]	1	1	.	.	.	.
C 309	111-00001-0012	CAP CR .047UF 50V	[EA]	1	1	1	1	.	.

SYMBOL	CAS PART NBR	DESCRIPTION	[UOM]	-0000	-0001	-0010	-0011	-0020	-0021
C 310	097-00104-0015	CAP AL 10UF 50V	[EA]	1	1	1	1	1	1
C 311	111-00001-0000	CAP CR .01UF 50V	[EA]	1	1	.	.	.	.
C 312	113-05331-0000	CAP DC 330PF 500V	[EA]	1	1	1	1	.	.
C 313	113-03151-0000	CAP DC 150PF 500V	[EA]	1	1	1	1	.	.
C 314	106-04100-0026	CAPCH 10PFNPO/100VV	[EA]	.	.	.	.	1	1
C 314	113-03120-0000	CAP DC 12PF 500V	[EA]	1	1	1	1	.	.
C 315	106-04120-0026	CAPCH 12PFNPO/100V	[EA]	.	.	.	.	1	1
C 315	113-03047-0000	CAP DC 4.7PF 500V	[EA]	1	1	1	1	.	.
C 316	106-04010-0020	CAP CH 1PF NPO/100	[EA]	.	.	.	.	1	1
C 316	111-02680-0020	CAP MC 68PF100V 5%	[EA]	1	1	1	1	.	.
C 317	106-00001-0018	CAP FC .82PF5%500V	[EA]	1	1	1	1	.	.
C 317	106-00146-1R5J	CAP PORC AXIAL 1.5PF	[EA]	.	.	.	.	1	1
C 318	106-04010-0020	CAP CH 1PF NPO/100	[EA]	.	.	.	.	1	1
C 318	111-02680-0020	CAP MC 68PF100V 5%	[EA]	1	1	1	1	.	.
C 319	106-04120-0026	CAPCH 12PFNPO/100V	[EA]	.	.	.	.	1	1
C 319	113-03027-0000	CAP DC 2.7PF 500V	[EA]	1	1	1	1	.	.
C 320	097-00104-0036	CAP AL 47UF 25V	[EA]	1	1	1	1	1	1
C 321	106-04104-0046	CAP CH.1UFX7R50V	[EA]	.	.	.	.	1	1
C 321	113-03151-0000	CAP DC 150PF 500V	[EA]	1	1	1	1	.	.
C 322	113-05331-0000	CAP DC 330PF 500V	[EA]	1	1	1	1	.	.
C 323	106-04479-0020	CAP CH 4.7 NPO/100	[EA]	.	.	.	.	1	1
C 323	113-03120-0000	CAP DC 12PF 500V	[EA]	1	1	1	1	.	.
C 324	113-03151-0000	CAP DC 150PF 500V	[EA]	1	1	1	1	.	.
C 326	113-05331-0000	CAP DC 330PF 500V	[EA]	1	1	1	1	.	.
C 327	097-00104-0015	CAP AL 10UF 50V	[EA]	1	1	1	1	.	.
C 328	113-03151-0000	CAP DC 150PF 500V	[EA]	1	1	1	1	.	.
C 329	106-04103-0046	CAP CH 10K X7R/50V	[EA]	.	.	.	.	1	1
C 329	111-00001-0000	CAP CR .01UF 50V	[EA]	1	1	1	1	.	.
C 330	096-01082-0005	CAP TN 10UF 20V	[EA]	1	1	1	1	.	.
C 330	096-01186-0036	CAP 10UF 35V 10%	[EA]	.	.	.	.	1	1
C 331	106-04104-0046	CAP CH.1UFX7R50V	[EA]	.	.	.	.	1	1
C 331	109-00007-0003	CAP DC .05UF 25V	[EA]	1	1	1	1	.	.
C 332	096-01082-0005	CAP TN 10UF 20V	[EA]	1	1	1	1	.	.
C 332	096-01186-0036	CAP 10UF 35V 10%	[EA]	.	.	.	.	1	1
C 333	096-01186-0030	CAP 1UF 35V 10%	[EA]	.	.	.	.	1	1
C 333	097-00104-0002	CAP AL 1.0UF 50V	[EA]	1	1	1	1	.	.
C 334	106-04103-0046	CAP CH 10K X7R/50V	[EA]	.	.	.	.	1	1
C 334	111-00001-0000	CAP CR .01UF 50V	[EA]	1	1	1	1	.	.
C 335	097-00104-0015	CAP AL 10UF 50V	[EA]	1	1	1	1	1	1
C 336	108-05017-0039	CAP PC .1UF 50V	[EA]	1	1	1	1	1	1
C 337	111-00001-0087	CAP CR 5600PF50V5%	[EA]	1	1	1	1	.	.
C 338	097-00104-0036	CAP AL 47UF 25V	[EA]	1	1	1	1	1	1

SYMBOL	CAS PART NBR	DESCRIPTION	[UOM]	-0000	-0001	-0010	-0011	-0020	-0021
C 339	097-00104-0015	CAP AL 10UF 50V	[EA]	1	1	1	1	1	1
C 340	106-04473-0047	CAP CH 47K X7R/50V	[EA]	.	.	.	.	1	1
C 340	111-00001-0012	CAP CR .047UF 50V	[EA]	1	1	1	1	.	.
C 341	106-04472-0057	CAPCH4700PFX74/100	[EA]	.	.	.	.	1	1
C 341	111-00001-0037	CAP CR .0047UF100V	[EA]	1	1	1	1	.	.
C 342	106-04273-0046	CAP CH 27K X7R/50V	[EA]	.	.	.	.	1	1
C 342	111-00001-0007	CAP CR .022UF 50V	[EA]	1	1	1	1	.	.
C 343	106-04473-0047	CAP CH 47K X7R/50V	[EA]	.	.	.	.	1	1
C 343	111-00001-0012	CAP CR .047UF 50V	[EA]	1	1	1	1	.	.
C 344	106-04472-0057	CAPCH4700PFX74/100	[EA]	.	.	.	.	.	1
C 344	111-00001-0037	CAP CR .0047UF100V	[EA]	1	1	1	1	.	.
C 345	106-04473-0047	CAP CH 47K X7R/50V	[EA]	.	.	.	.	1	1
C 345	111-00001-0011	CAP CR .047UF 50V	[EA]	1	1	1	1	.	.
C 346	106-04104-0046	CAP CH.1UFX7R50V	[EA]	.	.	.	.	1	1
C 346	111-00001-0001	CAP CR .1UF 50V	[EA]	1	1	1	1	.	.
C 347	106-04103-0046	CAP CH 10K X7R/50V	[EA]	.	.	.	.	1	1
C 347	111-00001-0000	CAP CR .01UF 50V	[EA]	1	1	1	1	.	.
C 348	106-04563-0046	CAP CH 56K X7R/50V	[EA]	.	.	.	.	1	1
C 348	111-00001-0078	CAP CR .056UF 100V	[EA]	1	1	1	1	.	.
C 349	106-04102-0026	CH 1KPF NPO/100V	[EA]	.	.	.	.	1	1
C 349	111-00001-0010	CAP CR .0039UF 50V	[EA]	1	1	1	1	.	.
C 350	097-00104-0015	CAP AL 10UF 50V	[EA]	1	1	1	1	.	.
C 351	106-04104-0046	CAP CH.1UFX7R50V	[EA]	.	.	.	.	1	1
C 351	111-00003-0016	CAP CR .1UF 10%	[EA]	1	1	1	1	.	.
C 352	106-04682-0046	CAP CH 6.8K 50V 5%	[EA]	.	.	.	.	1	1
C 352	111-00001-0005	CAP CR .0068UF 50V	[EA]	1	1	1	1	.	.
C 353	106-04104-0046	CAP CH.1UFX7R50V	[EA]	.	.	.	.	1	1
C 353	111-00003-0016	CAP CR .1UF 10%	[EA]	1	1	1	1	.	.
C 354	106-04104-0046	CAP CH.1UFX7R50V	[EA]	.	.	.	.	1	1
C 354	111-00001-0001	CAP CR .1UF 50V	[EA]	1	1	1	1	.	.
C 355	096-01082-0005	CAP TN 10UF 20V	[EA]	1	1	1	1	1	1
C 356	097-00104-0015	CAP AL 10UF 50V	[EA]	1	1	1	1	1	1
C 357	097-00104-0015	CAP AL 10UF 50V	[EA]	1	1	1	1	.	.
C 358	113-03180-0000	CAP DC 18PF 500V	[EA]	1	1	1	1	.	.
C 360	113-03151-0000	CAP DC 150PF 500V	[EA]	1	1	1	1	.	.
C 361	104-00001-0031	CAP SM 27PF 500V	[EA]	.	.	1	1	.	.
C 361	113-03470-0000	CAP DC 47PF 500V	[EA]	1	1	.	.	.	.
C 362	104-00001-0014	CAP SM 33PF 100V	[EA]	.	.	1	1	.	.
C 362	113-03470-0000	CAP DC 47PF 500V	[EA]	1	1	.	.	.	.
C 363	097-00104-0015	CAP AL 10UF 50V	[EA]	1	1	1	1	.	.
C 364	113-03100-0000	CAP DC 10PF 500V	[EA]	1	1	1	1	.	.
C 365	113-05331-0000	CAP DC 330PF 500V	[EA]	1	1	1	1	.	.

SYMBOL	CAS PART NBR	DESCRIPTION	[UOM]	-0000	-0001	-0010	-0011	-0020	-0021
C 366	113-03150-0000	CAP DC 15PF 500V	[EA]	1	1	1	1	.	.
C 367	113-03150-0000	CAP DC 15PF 500V	[EA]	1	1	1	1	.	.
C 368	097-00104-0036	CAP AL 47UF 25V	[EA]	1	1	1	1	.	.
C 369	097-00104-0015	CAP AL 10UF 50V	[EA]	1	1	.	.	.	.
C 369	097-00104-0036	CAP AL 47UF 25V	[EA]	.	.	1	1	1	1
C 370	097-00104-0036	CAP AL 47UF 25V	[EA]	1	1	1	1	1	1
C 371	106-04102-0026	CH 1KPF NPO/100V	[EA]	.	.	.	.	1	1
C 371	113-05102-0000	CAP DC .001UF 500V	[EA]	1	1	1	1	.	.
C 373	106-04102-0026	CH 1KPF NPO/100V	[EA]	.	.	.	.	1	1
C 373	113-05102-0000	CAP DC .001UF 500V	[EA]	1	1	1	1	.	.
C 374	096-01082-0010	CAP TN 10UF 35V	[EA]	1	1	1	1	.	.
C 374	096-01186-0036	CAP 10UF 35V 10%	[EA]	.	.	.	.	1	1
C 376	097-00104-0036	CAP AL 47UF 25V	[EA]	1	1	1	1	1	1
C 377	096-01082-0037	CAP TN 68UF 10V	[EA]		.	1	1	1	1
C 377	097-00104-0015	CAP AL 10UF 50V	[EA]	1	1	.	.	.	.
C 378	113-03221-0000	CAP DC 220PF 500V	[EA]	1	1	1	1	.	.
C 379	113-05331-0000	CAP DC 330PF 500V	[EA]	1	1	1	1	1	1
C 380	999-09999-0098	PLACE HOLDER	[EA]	0	0	0	0	.	.
C 381	113-03270-0000	CAP DC 27PF 500V	[EA]	1	1	.	.	.	.
C 384	106-04101-0026	CH 100PF NPO/100V	[EA]	.	.	.	.	1	1
C 384	113-05101-0000	CAP DC 100PF 500V	[EA]	1	1	1	1	.	.
C 385	096-01082-0033	CAP TN .47UF 50V	[EA]	1	1	1	1	.	.
C 385	096-01186-0028	CAP .47UF 35V 10%	[EA]	.	.	.	.	1	1
C 386	096-01186-0080	CAP 1.0UF 35V 20%	[EA]	.	.	.	.	1	1
C 386	097-00104-0002	CAP AL 1.0UF 50V	[EA]	1	1	1	1	.	.
C 387	106-04569-0020	CAP CH 5.6 NPO/100	[EA]	.	.	.	.	1	1
C 387	113-03056-0000	CAP DC 5.6PF 500V	[EA]	1	1	1	1	.	.
C 388	113-05390-0000	CAP DC 39PF 500V	[EA]	1	1	1	1	.	.
C 389	106-04102-0026	CH 1KPF NPO/100V	[EA]	.	.	.	.	1	1
C 389	111-00001-0002	CAP CR .015UF 50V	[EA]	1	1	.	.	.	.
C 389	111-00001-0036	CAP CR 1KPF 50V	[EA]	.	.	1	1	.	.
C 390	106-04153-0046	CAP CH 15KX7R/50V	[EA]	.	.	.	.	1	1
C 390	111-00001-0002	CAP CR .015UF 50V	[EA]	.	.	1	1	.	.
C 391	097-00104-0043	CAP AL 100UF 16V	[EA]	.	.	1	1	1	1
C 392	096-01082-0010	CAP TN 10UF 35V	[EA]	1	1	.	.	.	.
C 392	106-04689-0020	CAP CH 6.8 NPO/100	[EA]	.	.	.	.	1	1
C 392	111-00001-0055	CAP CR 6.8PF 100V	[EA]	.	.	1	1	.	.
C 394	106-05020-0020	CH 2PF NPO 100V	[EA]	.	.	.	.	1	1
C 394	113-05019-0001	CAP DC 1.9PF 500V	[EA]	.	.	1	1	.	.
C 395	096-01082-0010	CAP TN 10UF 35V	[EA]	.	.	1	1	.	.
C 395	096-01186-0036	CAP 10UF 35V 10%	[EA]	.	.	.	.	1	1
C 396	106-04331-0026	CAPCH330PFNPO/100V	[EA]	.	.	.	.	1	1

SYMBOL	CAS PART NBR	DESCRIPTION	[UOM]	-0000	-0001	-0010	-0011	-0020	-0021
C 396	111-00001-0015	CAP CR 330PF 50V	[EA]	.	.	1	1	.	.
C 398	106-04104-0046	CAP CH.1UFX7R50V	[EA]	.	.	1	1	1	1
C 398	106-04104-0078	CAP CH 100KZ5U/50V	[EA]	1	1	.	.	.	.
C 399	096-01082-0037	CAP TN 68UF 10V	[EA]	.	.	1	1	1	1
C 3000	096-01082-0002	CAP TN 1UF 35V	[EA]	.	.	1	1	.	.
C 3000	096-01186-0080	CAP 1.0UF 35V 20%	[EA]	.	.	.	.	1	1
C 3001	106-04120-0026	CAPCH 12PFNPO/100V	[EA]	.	.	.	.	1	1
C 3001	113-03015-0000	CAP DC 1.5PF 500V	[EA]	.	.	1	1	.	.
C 3002	106-04100-0026	CAPCH 10PFNPO/100VV	[EA]	.	.	.	.	1	1
C 3002	109-05100-0010	CAP CR 10PF 50V 5% NPO	[EA]	.	.	1	1	.	.
C 3003	106-04689-0020	CAP CH 6.8 NPO/100	[EA]	.	.	.	.	1	1
C 3003	111-00001-0054	CAP CR 5.6PF 100V	[EA]	.	.	1	1	.	.
C 3040	106-04569-0020	CAP CH 5.6 NPO/100	[EA]	.	.	.	.	1	1
C 3041	106-04121-0026	CAPCH120PFNPO/100V	[EA]	.	.	.	.	1	1
C 3042	106-04102-0026	CH 1KPF NPO/100V	[EA]	.	.	.	.	1	1
C 3043	097-00148-0010	CAP EL 10UF	[EA]	.	.	.	.	1	1
C 3044	106-04221-0026	CAP CH220PFNPO/100	[EA]	.	.	.	.	1	1
C 3045	106-04121-0026	CAPCH120PFNPO/100V	[EA]	.	.	.	.	1	1
C 3046	106-04220-0026	CH 22PF NPO/100V	[EA]	.	.	.	.	1	1
C 3047	106-04104-0046	CAP CH.1UFX7R50V	[EA]	.	.	.	.	1	1
C 3048	106-04104-0046	CAP CH.1UFX7R50V	[EA]	.	.	.	.	1	1
C 3049	106-05750-0026	CH 75PF NPO 100V	[EA]	.	.	.	.	1	1
C 3050	106-04102-0026	CH 1KPF NPO/100V	[EA]	.	.	.	.	1	1
C 3051	106-04104-0046	CAP CH.1UFX7R50V	[EA]	.	.	.	.	1	1
C 3052	097-00148-0010	CAP EL 10UF	[EA]	.	.	.	.	1	1
C 3053	106-04104-0046	CAP CH.1UFX7R50V	[EA]	.	.	.	.	1	1
C 3054	106-04104-0046	CAP CH.1UFX7R50V	[EA]	.	.	.	.	1	1
C 3055	106-04104-0046	CAP CH.1UFX7R50V	[EA]	.	.	.	.	1	1
C 3056	106-04104-0046	CAP CH.1UFX7R50V	[EA]	.	.	.	.	1	1
C 3057	106-04121-0026	CAPCH120PFNPO/100V	[EA]	.	.	.	.	1	1
C 3058	106-04560-0026	CAPCH 56PFNPO/100V	[EA]	.	.	.	.	1	1
C 3059	106-04121-0026	CAPCH120PFNPO/100V	[EA]	.	.	.	.	1	1
C 3060	106-04104-0046	CAP CH.1UFX7R50V	[EA]	.	.	.	.	1	1
C 3061	097-00148-0010	CAP EL 10UF	[EA]	.	.	.	.	1	1
C 3062	106-04121-0026	CAPCH120PFNPO/100V	[EA]	.	.	.	.	1	1
C 3063	097-00148-0010	CAP EL 10UF	[EA]	.	.	.	.	1	1
C 3066	106-04121-0026	CAPCH120PFNPO/100V	[EA]	.	.	.	.	1	1
C 3071	097-00148-0010	CAP EL 10UF	[EA]	.	.	.	.	1	1
C 3072	106-04331-0026	CAPCH330PFNPO/100V	[EA]	.	.	.	.	1	1
C 3073	106-04104-0046	CAP CH.1UFX7R50V	[EA]	.	.	.	.	1	1
C 3074	106-04104-0046	CAP CH.1UFX7R50V	[EA]	.	.	.	.	1	1
C 3075	097-00148-0009	CAP EL 47UF	[EA]	.	.	.	.	1	1

SYMBOL	CAS PART NBR	DESCRIPTION	[UOM]	-0000	-0001	-0010	-0011	-0020	-0021
C 3076	106-04102-0026	CH 1KPF NPO/100V	[EA]	.	.	.	.	1	1
C 3077	106-04121-0026	CAPCH120PFNPO/100V	[EA]	.	.	.	.	1	1
C 3078	106-04104-0046	CAP CH.1UFX7R50V	[EA]	.	.	.	.	1	1
C 3079	106-04229-0020	CAP CH 2.2 NPO/100	[EA]	.	.	.	.	1	1
C 3080	097-00148-0010	CAP EL 10UF	[EA]	.	.	.	.	1	1
C 3081	106-04121-0026	CAPCH120PFNPO/100V	[EA]	.	.	.	.	1	1
C 3082	106-04121-0026	CAPCH120PFNPO/100V	[EA]	.	.	.	.	1	1
C 3083	106-05399-0020	CH 3.9PF NPO/100V	[EA]	.	.	.	.	1	1
C 3084	106-04221-0026	CAP CH220PFNPO/100	[EA]	.	.	.	.	1	1
C 3085	106-04220-0026	CH 22PF NPO/100V	[EA]	.	.	.	.	1	1
C 3086	097-00108-0021	CAP EL 1.0UF 50V	[EA]	.	.	.	.	1	1
C 3087	106-04102-0026	CH 1KPF NPO/100V	[EA]	.	.	.	.	1	1
C 3088	106-04221-0026	CAP CH220PFNPO/100	[EA]	.	.	.	.	1	1
C 3089	106-04102-0026	CH 1KPF NPO/100V	[EA]	.	.	.	.	1	1
C 3090	106-04330-0026	CH 33PF NPO/100V	[EA]	.	.	.	.	1	1
C 3091	097-00109-0006	CAP EL 100UF 16V	[EA]	.	.	.	.	1	1
C 3092	106-04102-0026	CH 1KPF NPO/100V	[EA]	.	.	.	.	1	1
C 3093	106-04103-0046	CAP CH 10K X7R/50V	[EA]	.	.	.	.	1	1
C 3096	106-04150-0026	CH 15PF NPO/100V	[EA]	.	.	.	.	1	1
C 3101	106-04104-0046	CAP CH.1UFX7R50V	[EA]	.	.	.	.	1	1
C 3102	106-04104-0046	CAP CH.1UFX7R50V	[EA]	.	.	.	.	1	1
C 3103	106-04104-0046	CAP CH.1UFX7R50V	[EA]	.	.	.	.	1	1
C 3104	106-04331-0026	CAPCH330PFNPO/100V	[EA]	.	.	.	.	1	1
C 3105	106-04104-0046	CAP CH.1UFX7R50V	[EA]	.	.	.	.	1	1
C 3106	097-00109-0007	CAP EL 100UF 25V	[EA]	.	.	.	.	1	1
C 3107	096-01186-0014	CAP 10.0UF 16V 10%	[EA]	.	.	.	.	1	1
C 3108	097-00109-0007	CAP EL 100UF 25V	[EA]	.	.	.	.	1	1
C 3109	106-04104-0046	CAP CH.1UFX7R50V	[EA]	.	.	.	.	1	1
C 3110	096-01186-0014	CAP 10.0UF 16V 10%	[EA]	.	.	.	.	1	1
C 3111	106-04689-0020	CAP CH 6.8 NPO/100	[EA]	.	.	.	.	1	1
C 3112	106-04100-0026	CAPCH 10PFNPO/100VV	[EA]	.	.	.	.	1	1
C 3113	106-04104-0046	CAP CH.1UFX7R50V	[EA]	.	.	.	.	1	1
C 3114	106-04104-0046	CAP CH.1UFX7R50V	[EA]	.	.	.	.	1	1
C 3115	106-04104-0046	CAP CH.1UFX7R50V	[EA]	.	.	.	.	1	1
C 3116	097-00109-0006	CAP EL 100UF 16V	[EA]	.	.	.	.	1	1
C 3117	097-00109-0006	CAP EL 100UF 16V	[EA]	.	.	.	.	1	1
C 3118	106-04104-0046	CAP CH.1UFX7R50V	[EA]	.	.	.	.	1	1
C 3119	106-04104-0046	CAP CH.1UFX7R50V	[EA]	.	.	.	.	1	1
C 3120	097-00109-0006	CAP EL 100UF 16V	[EA]	.	.	.	.	1	1
C 3121	106-04104-0046	CAP CH.1UFX7R50V	[EA]	.	.	.	.	1	1
C 3122	111-00001-0038	CAP CR .0082UF 50V	[EA]	.	.	.	.	1	.
C 3123	111-00001-0087	CAP CR 5600PF50V5%	[EA]	.	.	.	.	1	1

SYMBOL	CAS PART NBR	DESCRIPTION	[UOM]	-0000	-0001	-0010	-0011	-0020	-0021
CJ 201	026-00018-0000	WIRE CKTJMPR 22AWG	[EA]	1	1	.	.	.	.
CJ 202	026-00018-0001	WIRE CKTJMPR 24AWG	[EA]	1	1	.	.	.	.
CR 200	007-04020-0002	DIO V SMV1163M5	[EA]	1	1	.	.	.	.
CR 200	007-04020-0005	MS5 VARACTOR DIODE	[EA]	.	.	.	.	1	1
CR 200	007-04104-0001	VARACTOR MV209M5	[EA]	.	.	1	1	.	.
CR 204	007-06106-0000	DIO 1N4156	[EA]	1	1	1	1	1	1
CR 205	007-06016-0000	DIO S 1N4154	[EA]	1	1	1	1	1	1
CR 206	007-06016-0000	DIO S 1N4154	[EA]	1	1	1	1	1	1
CR 207	007-06016-0000	DIO S 1N4154	[EA]	1	1	1	1	1	1
CR 208	007-06106-0000	DIO 1N4156	[EA]	1	1	1	1	1	1
CR 210	007-06016-0000	DIO S 1N4154	[EA]	1	1	1	1	1	1
CR 211	007-06016-0000	DIO S 1N4154	[EA]	1	1	1	1	1	1
CR 212	007-06016-0000	DIO S 1N4154	[EA]	1	1	1	1	1	1
CR 213	007-06016-0000	DIO S 1N4154	[EA]	1	1	1	1	1	1
CR 214	007-05046-0001	DIO Z 1N5231B	[EA]	.	.	1	1	1	1
CR 215	007-06016-0000	DIO S 1N4154	[EA]	1	1	.	.	.	.
CR 215	007-06046-0005	DIO S 1N916A	[EA]	.	.	1	1	1	1
CR 300	007-04020-0002	DIO V SMV1163M5	[EA]	1	1	.	.	.	.
CR 300	007-04104-0001	VARACTOR MV209M5	[EA]	.	.	1	1	.	.
CR 301	007-06106-0000	DIO 1N4156	[EA]	1	1	1	1	.	.
CR 304	007-06016-0000	DIO S 1N4154	[EA]	1	1	1	1	1	1
CR 305	007-06016-0000	DIO S 1N4154	[EA]	1	1	1	1	1	1
CR 308	007-06105-0000	DIO HV FDH444	[EA]	1	1	1	1	1	1
CR 3041	007-06178-0000	DIO PIN MMBV3401	[EA]	.	.	.	.	1	1
CR 3042	007-06178-0000	DIO PIN MMBV3401	[EA]	.	.	.	.	1	1
CR 3043	007-06178-0000	DIO PIN MMBV3401	[EA]	.	.	.	.	1	1
CR 3044	007-06178-0000	DIO PIN MMBV3401	[EA]	.	.	.	.	1	1
CR 3045	007-06180-0000	DIO SW MMBD6050	[EA]	.	.	.	.	1	1
CR 3046	007-06421-0000	PIN DIODE	[EA]	.	.	.	.	1	1
CR 3047	007-04138-0000	VARACTOR DIODE	[EA]	.	.	.	.	1	1
CR 3048	007-06223-0000	DIO DA204K	[EA]	.	.	.	.	1	1
CR 3049	007-06223-0000	DIO DA204K	[EA]	.	.	.	.	1	1
CR 3050	007-05117-0005	DIO Z 5.1V SOT	[EA]	.	.	.	.	1	1
CR 3051	007-06016-0000	DIO S 1N4154	[EA]	.	.	.	.	1	1
FL 200	017-00069-0000	FLTR XTAL 8P	[EA]	1	.	1	.	1	.
FL 200	017-00076-0000	FLTR XTAL 11.4MHZ	[EA]	.	1	.	1	.	1
FL 300	017-00080-0000	FLTR XTAL 11.1MHZ	[EA]	1	1	1	1	.	.
FL 3040	017-00246-0000	XTAL FILTER 6-POLE	[EA]	.		.	.	1	1
FL 3041	017-00246-0000	XTAL FILTER 6-POLE	[EA]	.		.	.	1	1
I 200	120-03020-0000	IC MC1350P	[EA]	1	1	1	1	.	.
I 200	120-03020-0001	IC IF AMP SO	[EA]	.		.	.	1	1
I 201	120-03020-0000	IC MC1350P	[EA]	1	1	1	1	.	.

SYMBOL	CAS PART NBR	DESCRIPTION	[UOM]	-0000	-0001	-0010	-0011	-0020	-0021
I 201	120-03020-0001	IC IF AMP SO	[EA]	.		.	.	1	1
I 202	120-03053-0008	IC LM358N	[EA]	1	1	1	1	.	.
I 202	120-03053-0009	LM358D DUAL OP AMP	[EA]	.		.	.	1	1
I 300	120-03020-0000	IC MC1350P	[EA]	1	1	1	1	.	.
I 300	120-03020-0001	IC IF AMP SO	[EA]	.		.	.	1	1
I 301	120-03020-0000	IC MC1350P	[EA]	1	1	1	1	.	.
I 301	120-03020-0001	IC IF AMP SO	[EA]	.		.	.	1	1
I 302	120-03052-0000	IC LM324N	[EA]	1	1	1	1	.	.
I 302	120-03196-0000	IC LM2902D	[EA]	.		.	.	1	1
I 303	120-03052-0000	IC LM324N	[EA]	1	1	1	1	.	.
I 303	120-03196-0000	IC LM2902D	[EA]	.		.	.	1	1
I 304	120-03053-0008	IC LM358N	[EA]	1	1	1	1	.	.
I 304	120-03053-0009	LM358D DUAL OP AMP	[EA]	.		.	.	1	1
I 3040	120-03053-0009	LM358D DUAL OP AMP	[EA]	.		.	.	1	1
I 3042	120-03326-0000	IC MC79L05ACP	[EA]	.		.	.	1	1
L 200	019-02312-0060	IDCTR V 2.5T	[EA]	1	1	1	1	1	1
L 201	019-02082-0016	CH 1.5UH 5%	[EA]	1	1	.	.	1	1
L 201	019-02084-0024	CH 1.5UH 5%	[EA]	.		1	1	.	.
L 202	019-02312-0060	IDCTR V 2.5T	[EA]	1	1	1	1	1	1
L 203	019-02312-0060	IDCTR V 2.5T	[EA]	1	1	1	1	1	1
L 204	019-02082-0019	CH 1.8UH 10%	[EA]	1	1	1	1	1	1
L 205	019-02082-0025	CH 3.3UH 10%	[EA]	1	1	1	1	1	1
L 206	019-02312-0060	IDCTR V 2.5T	[EA]	1	1	1	1	1	1
L 207	019-02084-0001	CH .15UH 10%	[EA]	1	1	1	1	1	1
L 209	019-08078-0000	COIL TUN 20MH	[EA]	1	1	1	1	1	1
L 210	019-08078-0000	COIL TUN 20MH	[EA]	1	1	1	1	1	1
L 212	019-08078-0000	COIL TUN 20MH	[EA]	1	1	1	1	1	1
L 213	019-02084-0001	CH .15UH 10%	[EA]	1	1	1	1	1	1
L 214	019-02084-0001	CH .15UH 10%	[EA]	1	1	1	1	1	1
L 215	999-09999-0098	PLACE HOLDER	[RF]	.		.	.	0	0
L 216	019-02084-0001	CH .15UH 10%	[EA]	1	1	1	1	1	1
L 217	019-02084-0017	CH .68UH 10%	[EA]	1	1	.	.	.	.
L 300	019-02313-0060	IDCTR V 3.5T	[EA]	.		.	.	1	1
L 300	019-02313-0061	IDCTR V 3.5T	[EA]	1	1	1	1	.	.
L 301	019-02313-0060	IDCTR V 3.5T	[EA]	.		.	.	1	1
L 301	019-02313-0061	IDCTR V 3.5T	[EA]	1	1	1	1	.	.
L 302	019-02084-0029	CH 2.2UH 10%	[EA]	1	1	1	1	.	.
L 303	019-02313-0060	IDCTR V 3.5T	[EA]	.		.	.	1	1
L 303	019-02313-0061	IDCTR V 3.5T	[EA]	1	1	1	1	.	.
L 304	019-02313-0060	IDCTR V 3.5T	[EA]	.		.	.	1	1
L 304	019-02313-0061	IDCTR V 3.5T	[EA]	1	1	1	1	.	.
L 305	019-02084-0005	CH .22UH 10%	[EA]	1	1	1	1	.	.

SYMBOL	CAS PART NBR	DESCRIPTION	[UOM]	-0000	-0001	-0010	-0011	-0020	-0021
L 306	019-08078-0000	COIL TUN 20MH	[EA]	1	1	1	1	1	1
L 307	019-02099-0000	CHOKE .047UH 10%	[EA]	1	1	1	1	1	1
L 308	019-02313-0061	IDCTR V 3.5T	[EA]	1	1	1	1	.	.
L 309	019-02082-0006	CH .47UH 10%	[EA]	1	1	1	1	.	.
L 310	019-02084-0001	CH .15UH 10%	[EA]	.	.	1	1	1	1
L 3041	019-02084-0045	CH 10UH 10%	[EA]	.	.	.	.	1	1
L 3042	019-02084-0045	CH 10UH 10%	[EA]	.	.	.	.	1	1
L 3043	019-02084-0045	CH 10UH 10%	[EA]	.	.	.	.	1	1
L 3044	019-02084-0045	CH 10UH 10%	[EA]	.	.	.	.	1	1
L 3045	019-02084-0028	CH 2.2UH 5%	[EA]	.	.	.	.	1	1
L 3046	019-02084-0045	CH 10UH 10%	[EA]	.	.	.	.	1	1
L 3047	019-02084-0045	CH 10UH 10%	[EA]	.	.	.	.	1	1
L 3048	013-00028-0000	FERR BEAD W/LEAD	[EA]	.	.	.	.	1	1
L 3050	019-02660-0032	IND SM 2200 10%	[EA]	.	.	.	.	1	1
L 3051	019-02572-0029	IND MIN 27MH	[EA]	.	.	.	.	1	.
P 403	155-02026-0006	JMPR CA ASSY 16P	[EA]	1	1	1.	1	1	1
Q 200	007-00254-0000	XSTR S PNP MPSA92	[EA]	1	1	1	1	.	.
Q 200	007-00254-0001	XSTR S PNP SOT-23	[EA]	.	.	.	.	1	1
Q 201	007-00957-0000	TSTR MOS FET BF996	[EA]	.	.	.	.	1	1
Q 201	999-09999-0098	PLACE HOLDER	[RF]	0	0	0	0	.	.
Q 202	007-00957-0000	TSTR MOS FET BF996	[EA]	.	.	.	.	1	1
Q 202	999-09999-0098	PLACE HOLDER	[RF]	0	0	0	0	.	.
Q 203	007-00195-0000	XSTR S MPSH10	[EA]	1	1	1	1	.	.
Q 203	007-00195-0001	XSTR MPSH10	[EA]	.	.	.	.	1	1
Q 204	007-00195-0000	XSTR S MPSH10	[EA]	1	1	1	1	.	.
Q 204	007-00195-0001	XSTR MPSH10	[EA]	.	.	.	.	1	1
Q 205	007-00078-0005	XSTR S NPN 2N3415	[EA]	1	1	1	1	.	.
Q 205	007-00383-0004	SOT-23 2N2222A XST	[EA]	.	.	.	.	1	1
Q 206	007-00078-0005	XSTR S NPN 2N3415	[EA]	1	1	1	1	.	.
Q 206	007-00383-0004	SOT-23 2N2222A XST	[EA]	.	.	.	.	1	1
Q 211	007-00215-0000	XSTR 2N5486	[EA]	1	1	1	1	1	1
Q 212	007-00195-0000	XSTR S MPSH10	[EA]	1	1	1	1	.	.
Q 212	007-00195-0001	XSTR MPSH10	[EA]	.	.	.	.	1	1
Q 213	007-00195-0000	XSTR S MPSH10	[EA]	1	1	1	1	.	.
Q 213	007-00195-0001	XSTR MPSH10	[EA]	.	.	.	.	1	1
Q 214	007-00250-0000	XSTR 2N4427	[EA]	1	1	1	1	1	1
Q 215	007-00078-0005	XSTR S NPN 2N3415	[EA]	1	1	1	1	.	.
Q 215	007-00383-0004	SOT-23 2N2222A XST	[EA]	.	.	.	.	1	1
Q 216	007-00078-0005	XSTR S NPN 2N3415	[EA]	1	1	1	1	.	.
Q 216	007-00383-0004	SOT-23 2N2222A XST	[EA]	.	.	.	.	1	1
Q 217	007-00078-0005	XSTR S NPN 2N3415	[EA]	1	1	1	1	.	.
Q 217	007-00383-0004	SOT-23 2N2222A XST	[EA]	.	.	.	.	1	1

SYMBOL	CAS PART NBR	DESCRIPTION	[UOM]	-0000	-0001	-0010	-0011	-0020	-0021
Q 218	007-00238-0000	XSTR S PNP FPN4917	[EA]	1	1	1	1	.	.
Q 218	007-00261-0003	XSTR 2N2907A (SOT)	[EA]	.	.	.	.	1	1
Q 219	007-00078-0005	XSTR S NPN 2N3415	[EA]	1	1	1	1	.	.
Q 219	007-00383-0004	SOT-23 2N2222A XST	[EA]	.	.	.	.	1	1
Q 220	007-00280-0001	XSTR E175/J175	[EA]	1	1	1	1	.	.
Q 220	007-00932-0000	JFET P-CHANNEL	[EA]	.	.	.	.	1	1
Q 221	007-00078-0005	XSTR S NPN 2N3415	[EA]	1	1	1	1	.	.
Q 221	007-00383-0004	SOT-23 2N2222A XST	[EA]	.	.	.	.	1	1
Q 222	007-00078-0005	XSTR S NPN 2N3415	[EA]	.		1	1	.	.
Q 222	007-00383-0004	SOT-23 2N2222A XST	[EA]	.	.	.	.	1	1
Q 223	007-00238-0000	XSTR S PNP FPN4917	[EA]	.	.	1	1	.	.
Q 223	007-00261-0003	XSTR 2N2907A (SOT)	[EA]	.	.	.	.	1	1
Q 224	007-00078-0006	XSTR S NPN 2N3417	[EA]	1	1	1	1	.	.
Q 224	007-00383-0004	SOT-23 2N2222A XST	[EA]	.	.	.	.	1	1
Q 225	007-00078-0006	XSTR S NPN 2N3417	[EA]	1	1	1	1	.	.
Q 225	007-00383-0004	SOT-23 2N2222A XST	[EA]	.	.	.	.	1	1
Q 226	007-00078-0006	XSTR S NPN 2N3417	[EA]	1	1	1	1	.	.
Q 226	007-00383-0004	SOT-23 2N2222A XST	[EA]	.	.	.	.	1	1
Q 227	007-00078-0006	XSTR S NPN 2N3417	[EA]	1	1	1	1	.	.
Q 227	007-00383-0004	SOT-23 2N2222A XST	[EA]	.	.	.	.	1	1
Q 228	007-00078-0006	XSTR S NPN 2N3417	[EA]	1	1	1	1	.	.
Q 228	007-00383-0004	SOT-23 2N2222A XST	[EA]	.	.	.	.	1	1
Q 300	007-00310-0001	XSTR SFE1730	[EA]	1	1	.	.	.	.
Q 300	999-09999-0098	PLACE HOLDER	[RF]	.	.	0	0	.	.
Q 301	007-00452-0000	XSTR 3N212	[EA]	1	1	.	.	.	.
Q 301	999-09999-0098	PLACE HOLDER	[RF]	.	.	0	0	.	.
Q 302	007-00195-0000	XSTR S MPSH10	[EA]	1	1	1	1	.	.
Q 302	007-00195-0001	XSTR MPSH10	[EA]	.	.	.	.	1	1
Q 303	007-00195-0000	XSTR S MPSH10	[EA]	1	1	1	1	.	.
Q 303	007-00195-0001	XSTR MPSH10	[EA]	.	.	.	.	1	1
Q 307	007-00179-0000	XSTR S NPN 2N3904	[EA]	1	1	1	1	.	.
Q 308	007-00195-0000	XSTR S MPSH10	[EA]	1	1	1	1	.	.
Q 311	007-00078-0005	XSTR S NPN 2N3415	[EA]	1	1	1	1	.	.
Q 311	007-00383-0004	SOT-23 2N2222A XST	[EA]	.	.	.	.	1	1
Q 312	999-09999-0097	USED ON NEXT ASSY	[EA]	0	0	0	0	0	0
Q 313	999-09999-0097	USED ON NEXT ASSY	[EA]	0	0	0	0	0	0
Q 3040	007-00953-0000	MRF586 - T05	[EA]	.	.	.	.	1	1
Q 3042	007-00971-0000	N CHANNEL MESFET	[EA]	.	.	.	.	1	1
Q 3043	007-00195-0001	XSTR MPSH10	[EA]	.	.	.	.	1	1
Q 3044	007-00254-0001	XSTR S PNP SOT-23	[EA]	.	.	.	.	1	1
Q 3045	007-00215-0000	XSTR 2N5486	[EA]	.	.	.	.	1	1
Q 3046	007-00215-0000	XSTR 2N5486	[EA]	.	.	.	.	1	1