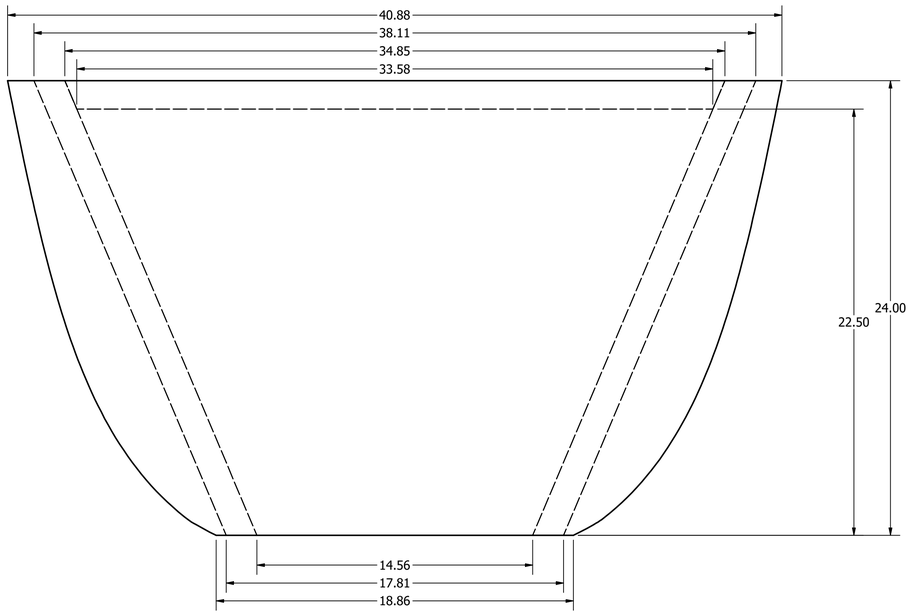

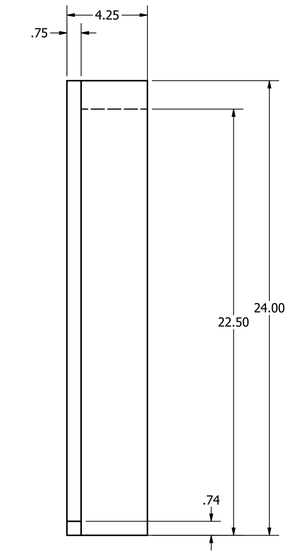

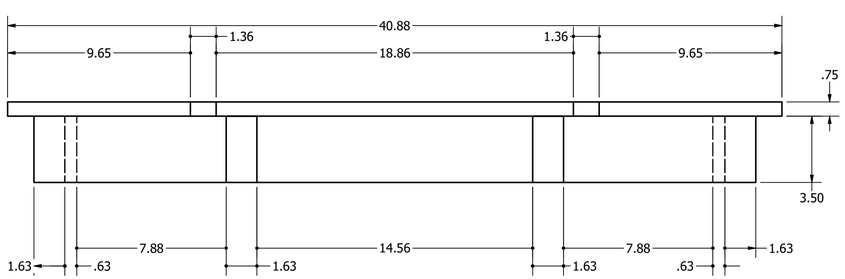

Parts List		
Part	Quantity	Item Number
1/4 Machine Screw, 2.5" Long	16	810-001
1/4" Bolt	16	810-002
1/4" Washer	16	810-003
3/4" Birch Plywood	1	840-101
3/4" MDF	1	840-102
1/8" Flexible Plywood	1	840-103
Push Pull Circuit Breaker	12+	
15A Circuit Breakers	12+	
Arduino Mega 2560	1	820-001

DRAWN br0mmie 12/01/2022

Br0mmie Drawings

TITLE

Front Wood Assembly

SIZE D

DWG NO 1-1

REV 01